WWW.HSPUTELIDS.COM

Part No: B52R

Fitting Time: 180 minutes

ROLL.R.COVER

To suit Mazda BT-50 Space Cab

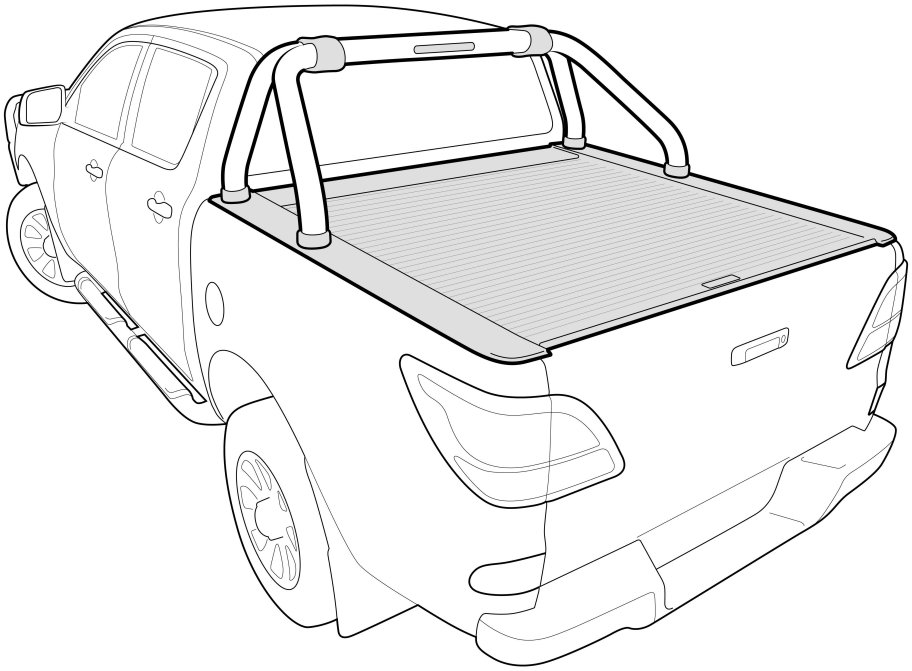

Roll-R-Cover

Fitting Instructions

© Roll Я Cover

General Notes

- Read through the fitting instructions before installation of accessory.
- Always install the Roll Я Cover Wiring Kit following the workshop manual and fitting instructions provided. Failure to do so may cause damage to the vehicle or the accessory.
- Ensure all recyclable components and packaging are discarded and recycled following local recycling regulations.
- It is always recommended that the Roll Я Cover Wiring Kit is fitted by a qualified automotive technician.
- Safely store and protect any removed vehicle components.

Safety Notes

- Check that all work practices comply with safety standards.
- Please wear appropriate clothing and use safety equipment.

Fitting Time

180 minutes

Parts Supplied

B52R	EXTRA CAB MAZDA BT50 - ROLL R COVER WITH SPORTS BAR MOUNTING KIT		
PART DESCRIPTION	PART NUMBER	QUANTITY/LENGTH	CHECK
B52R FITTING INSTRUCTIONS	361*	1	
LUBRICANT PUMP SPRAY	47*	1	
REMOTE	215*	2	
PRIMER STICK	44*	1	
CABLE TIE 4.8X300	217*	10	
ROLL R LOOM	216*	1	
B5R CANISTER AND CURTAIN	267*	1	
B52R RAIL RIGHTHAND	291*	1	
B52R RAIL LEFTHAND	292*	1	
M6 GRUB SCREW	134*	2	
M6 NYLOC NUT	80*	2	
1/4X1X16G WASHER	352*	2	
B4(1) GASKET	235	2	
B4(2) GASKET	353	2	
M6 FLANGE NUT	136*	2	
3 HOLE STAINLESS PLATE	39*	2	
BLACK NITRILE FOAM 6MMX12.5MMX1.6M	24*	2	
HOSE 600MM	11*	4	
COMPLETE CANISTER COVER	397	1	
OPERATION LEAFLET	66	1	
MAINTENANCE LEAFLET	67	1	
ADJUSTMENT PLATES	31	2	
RIGHT ANGLE BRACE BRACKET	RBRH	1	
RIGHT ANGLE BRACE BRACKET	RBLH	1	
BLACK PUTTY	3*	8	

© Roll Я Cover

The following steps are for vehicles fitted with a Sportsbar (kit will only work with OE Sportsbar).

Step 1

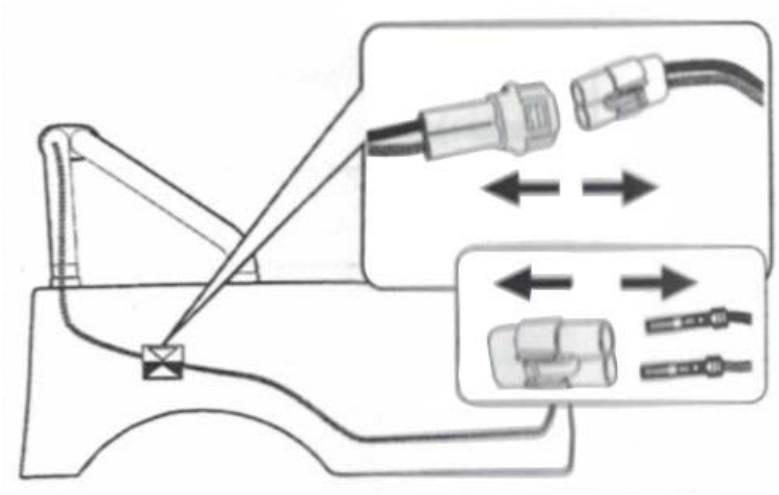

Locate brake light wiring loom from rear passenger side wheel arch.
Disconnect and remove plug from connectors.

Step 2

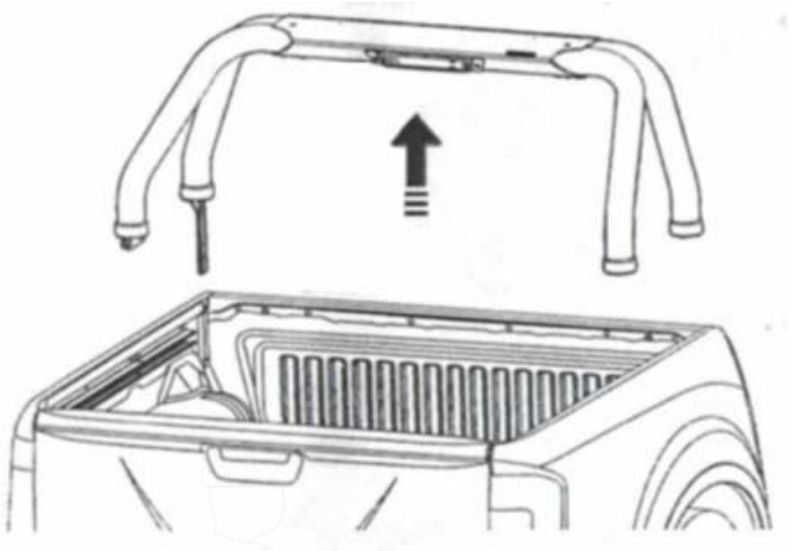

Remove Sports Bars from vehicle.

© Roll Я Cover

The following steps are for vehicles with bed liners. If there are no bed liners installed move to Step 4

Step 3

Trim front of bed liner by 180mm from the top of the ute bed as shown.

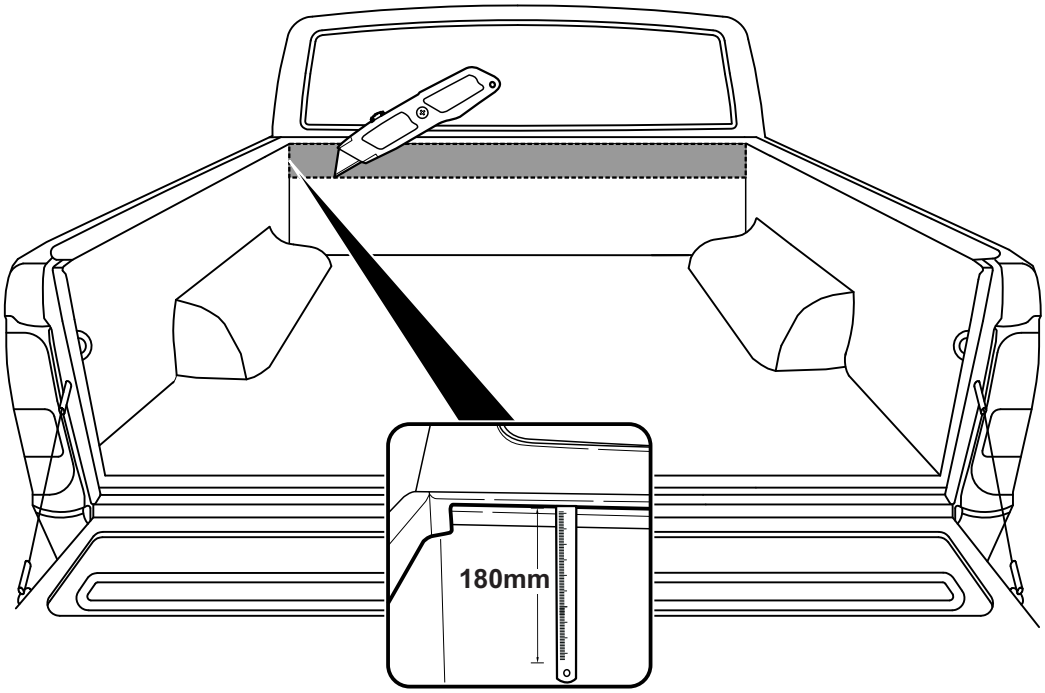

Step 4

Cut a 20mm split for bed liner to flex.

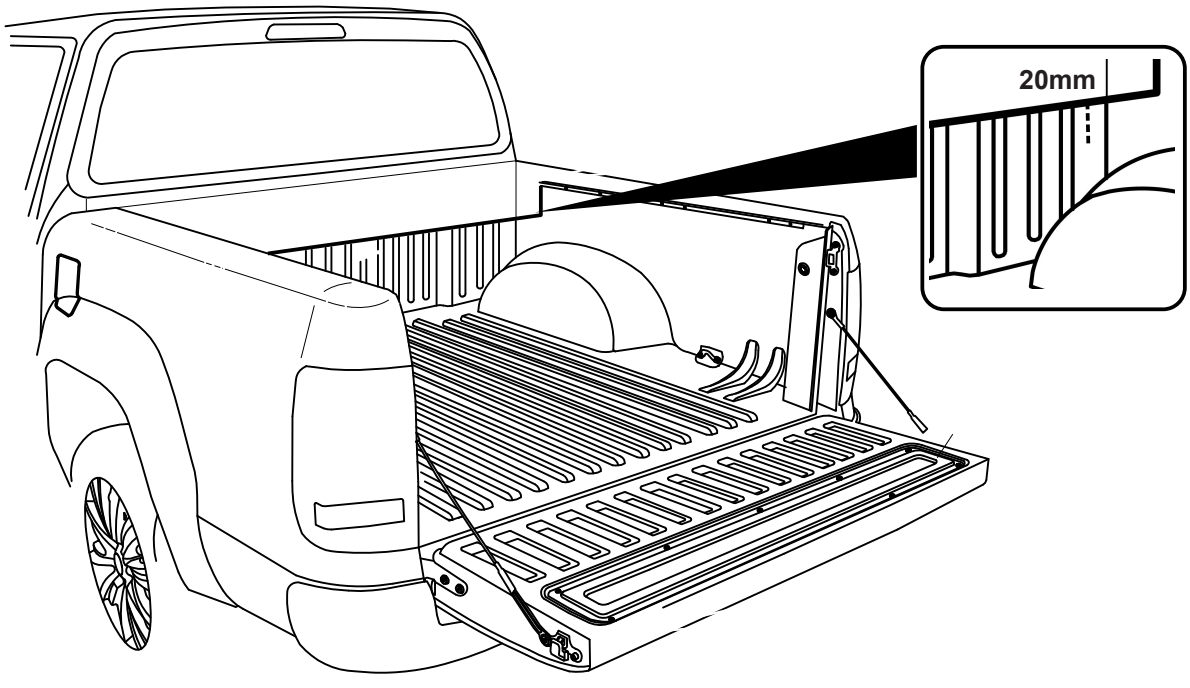

© Roll Я Cover

Step 5

Measure 20mm down from top of tailgate and trim tailgate liner.

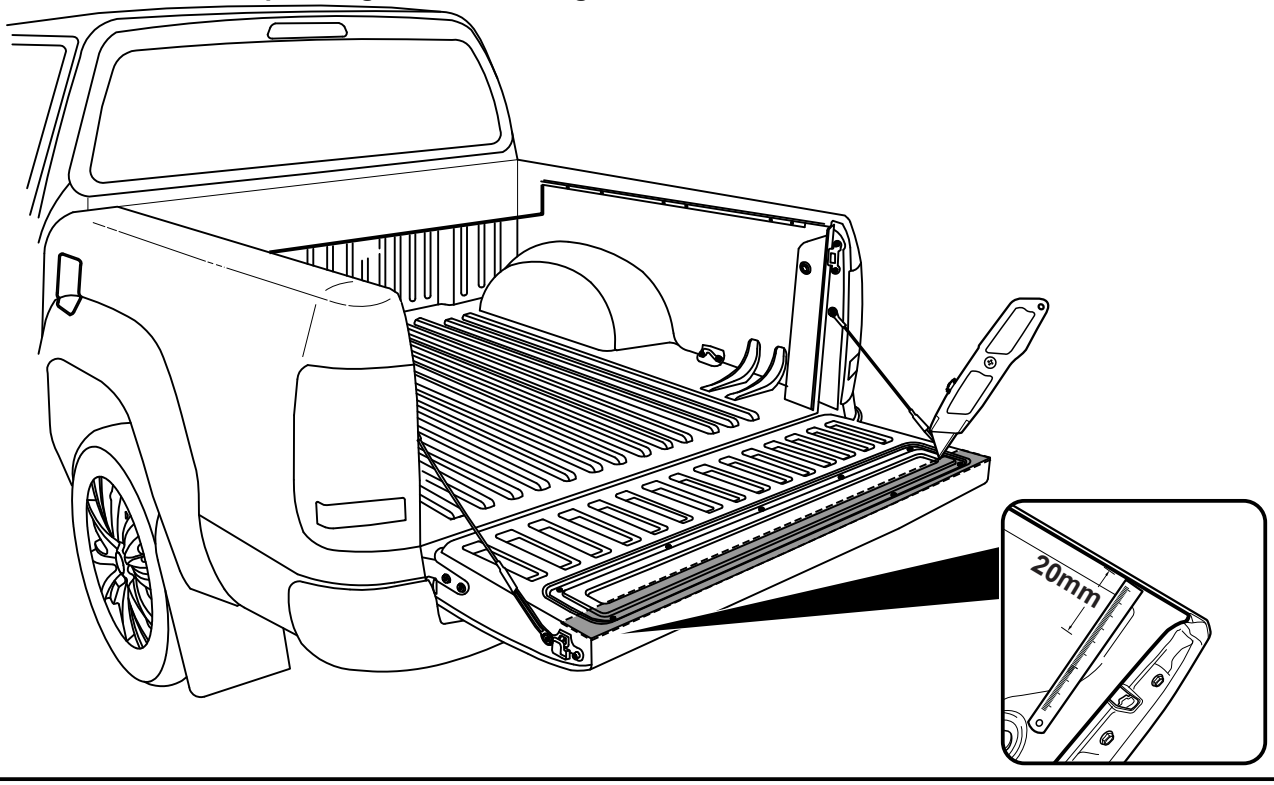

Step 6

Roll-R-Cover preparation steps

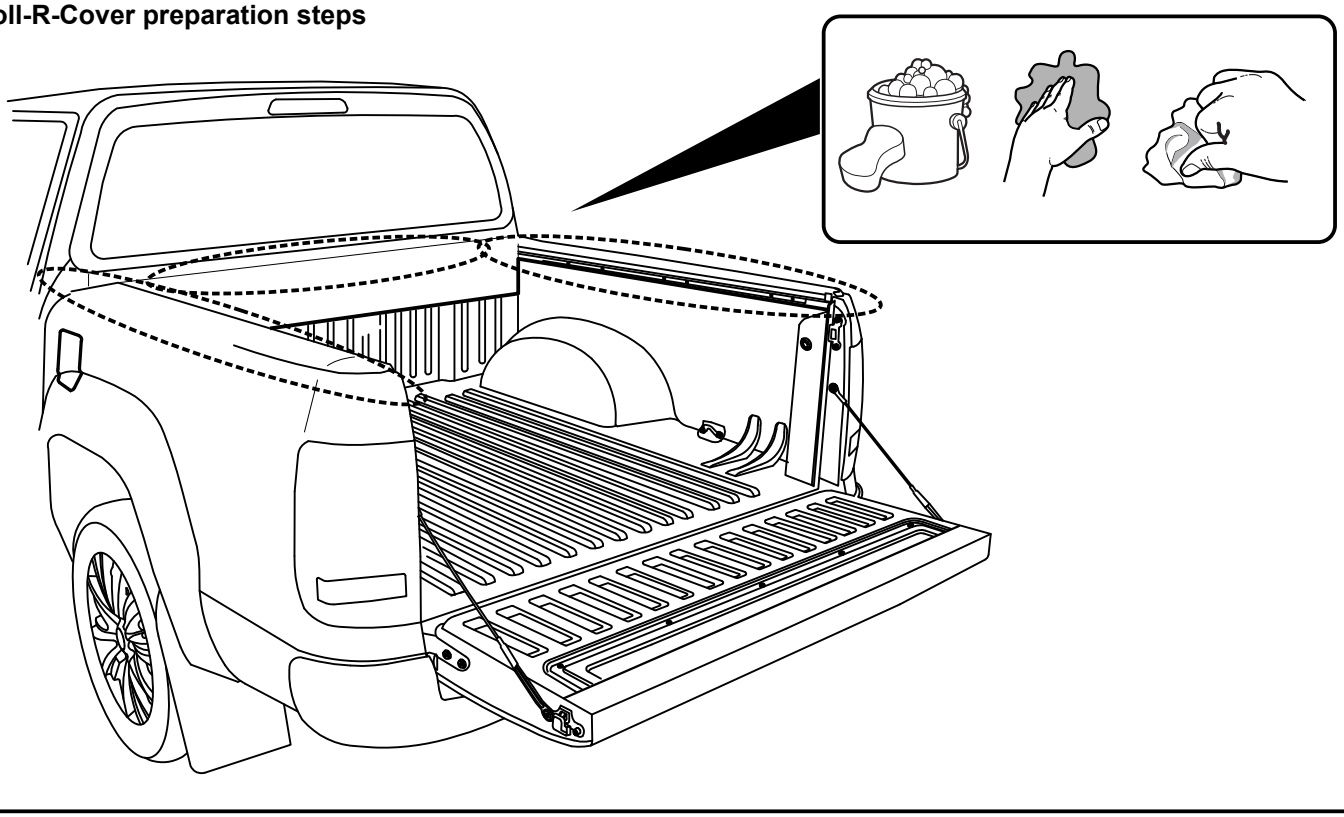

© Roll Я Cover

Step 7

Carefully unpack the box.

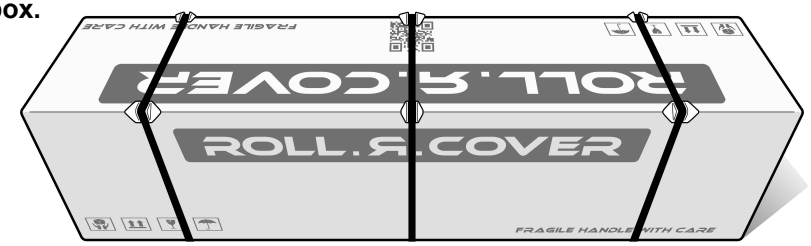

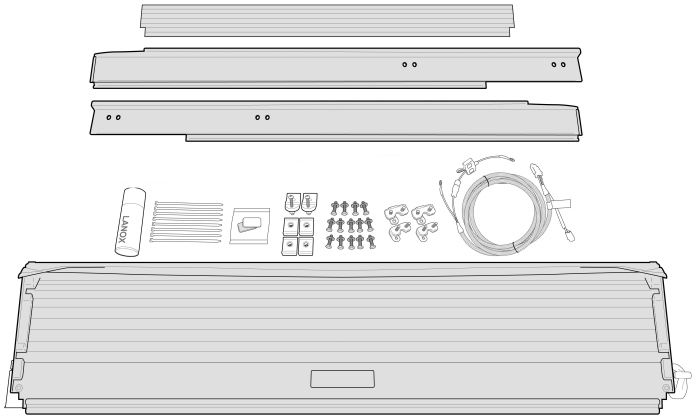

Step 8

Wiring Harness steps

1 **Feed through the cavity**

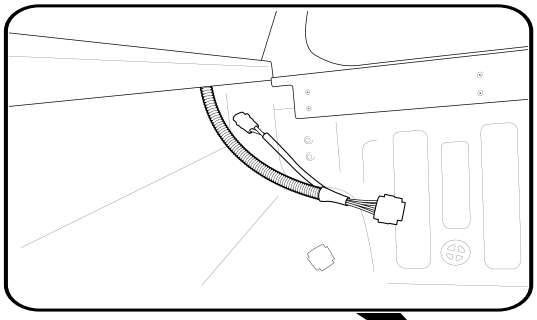

3

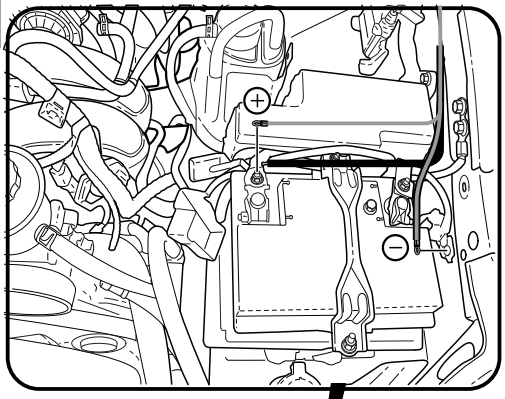

2

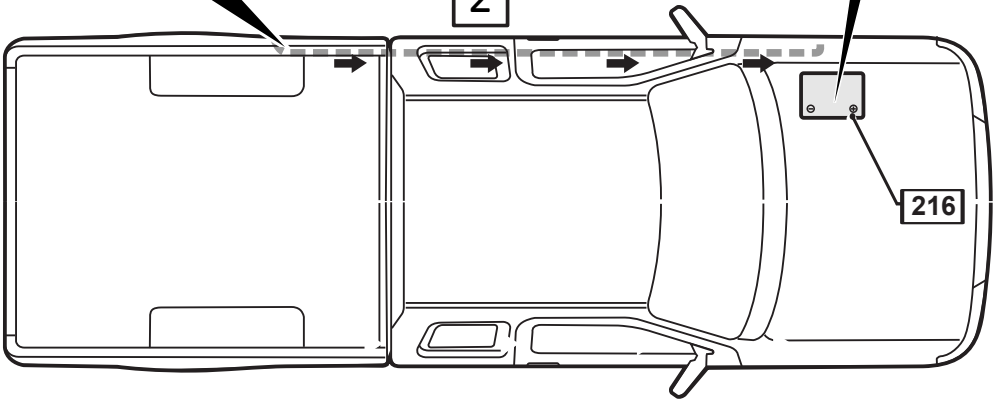

Run the wiring from the front corner cavity to the battery over the chassis rail. Making sure to keep away from hot obstructions and cable tie every 400mm.

© Roll Я Cover

Step 9

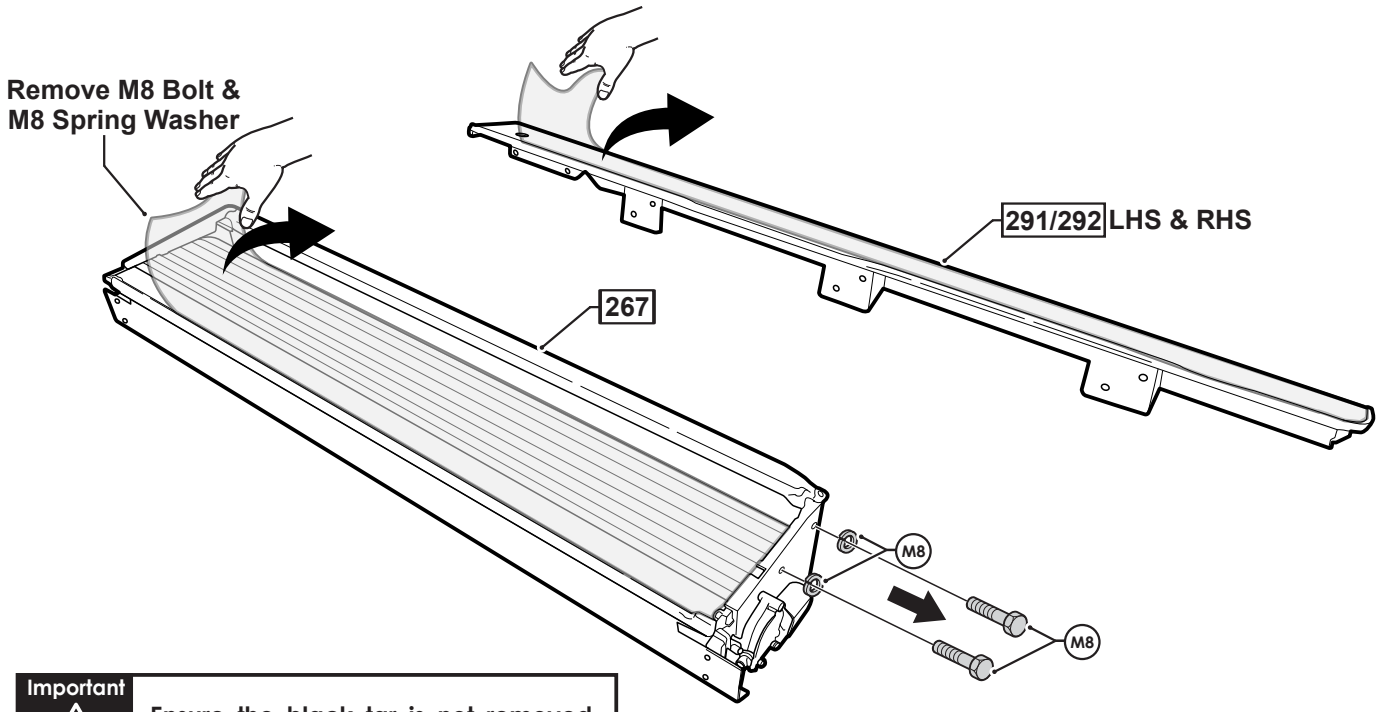

Important

Ensure the black tar is not removed with the film.

Step 10

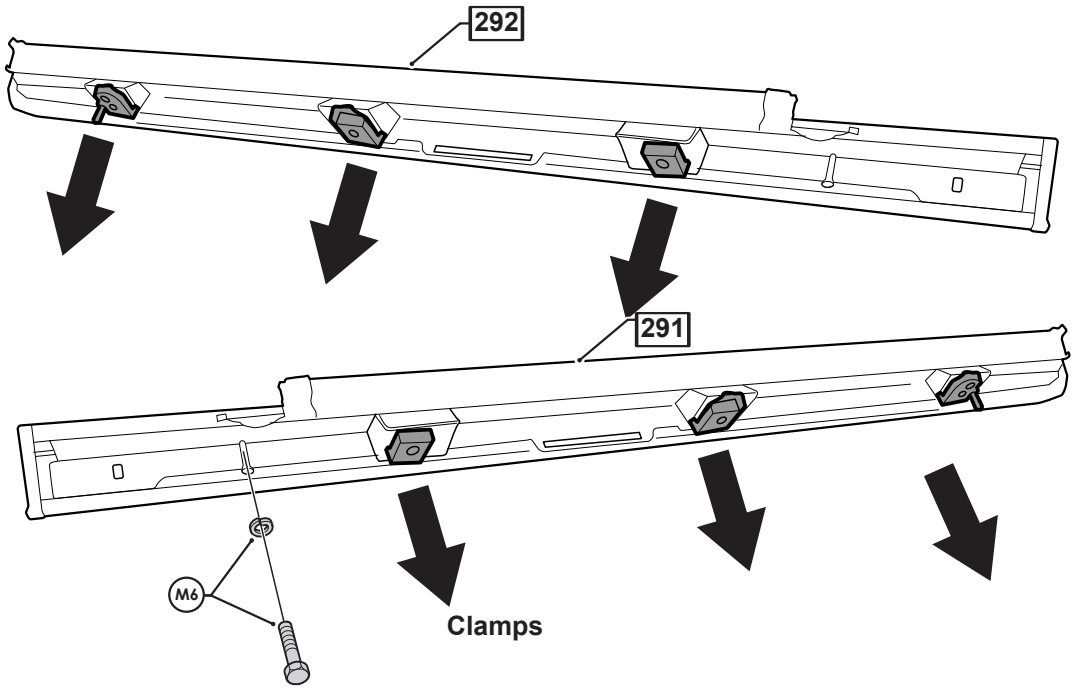

M6 Bolt and M6 Spring Washer is only on the RHS Side Rail

© Roll Я Cover

Step 11

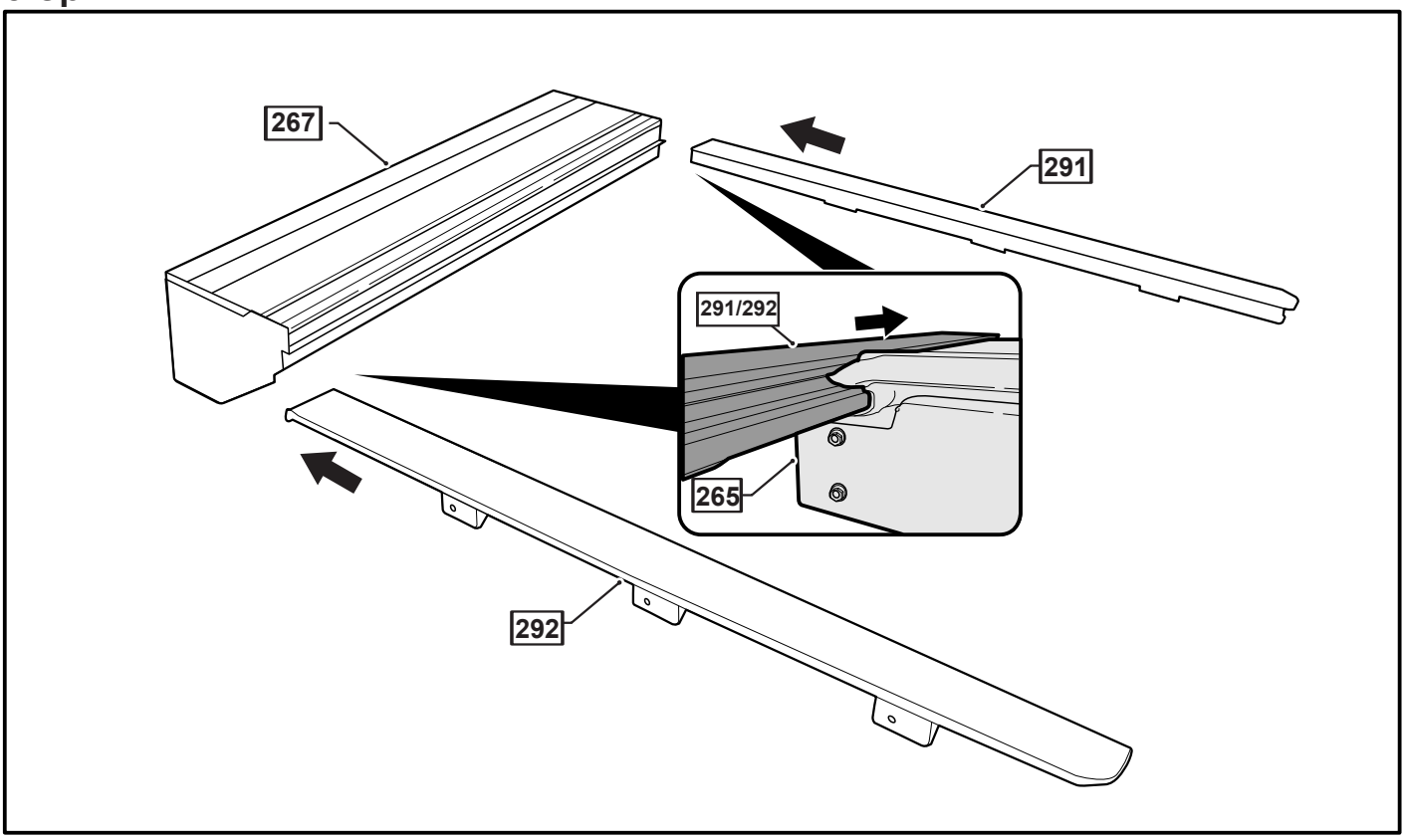

Step 12

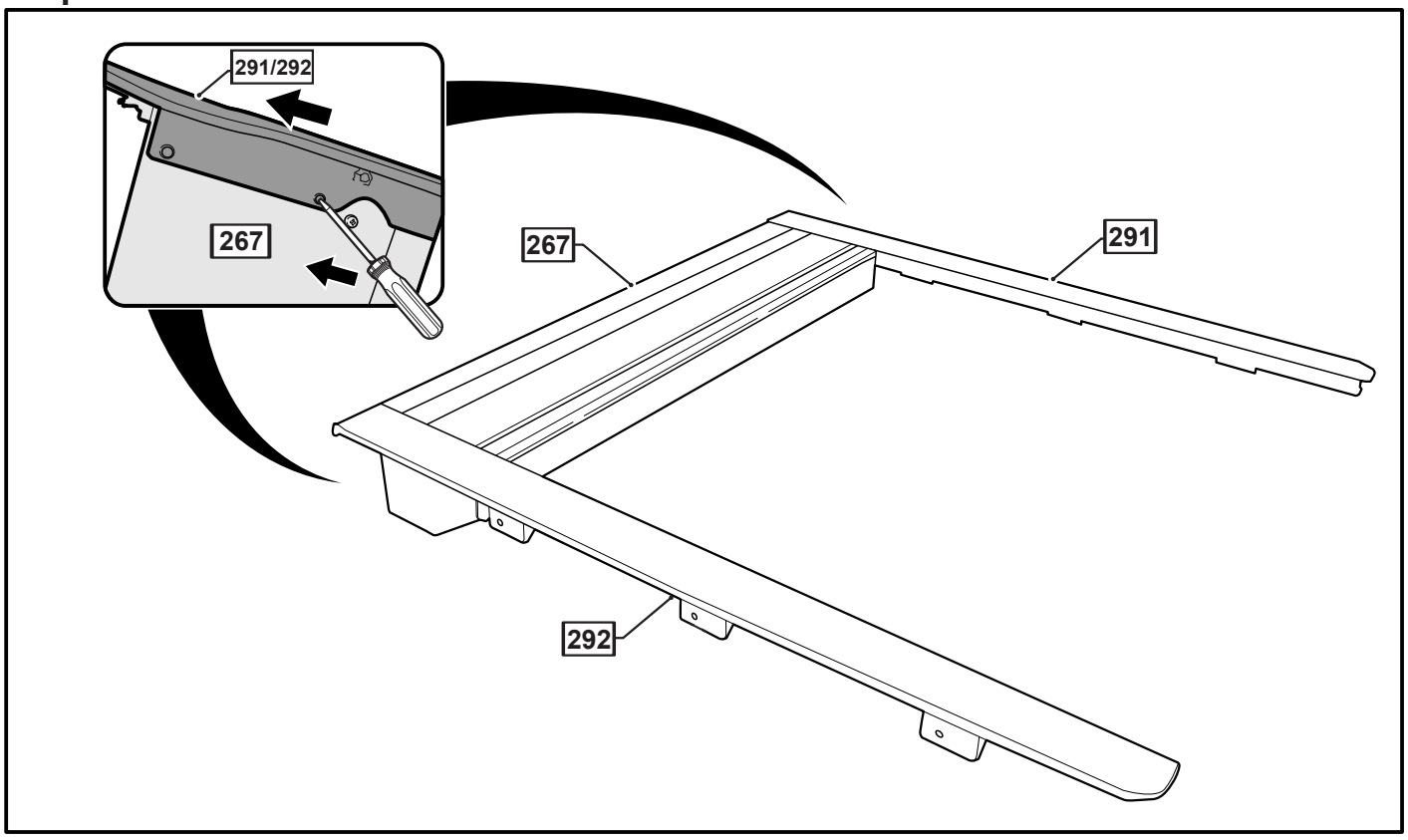

© Roll Я Cover

Step 13

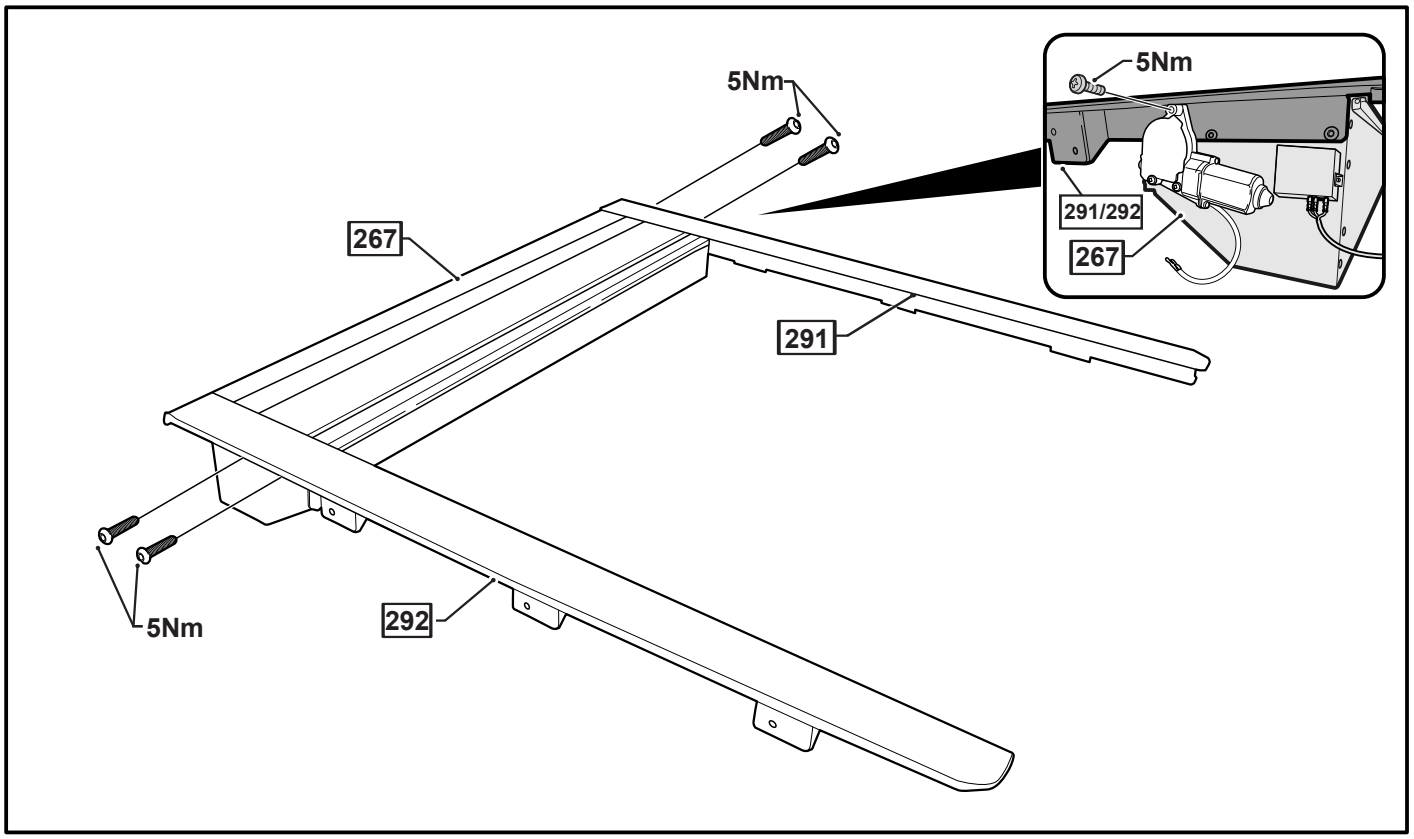

Step 14

Apply tar sealant to the gap under water channel.

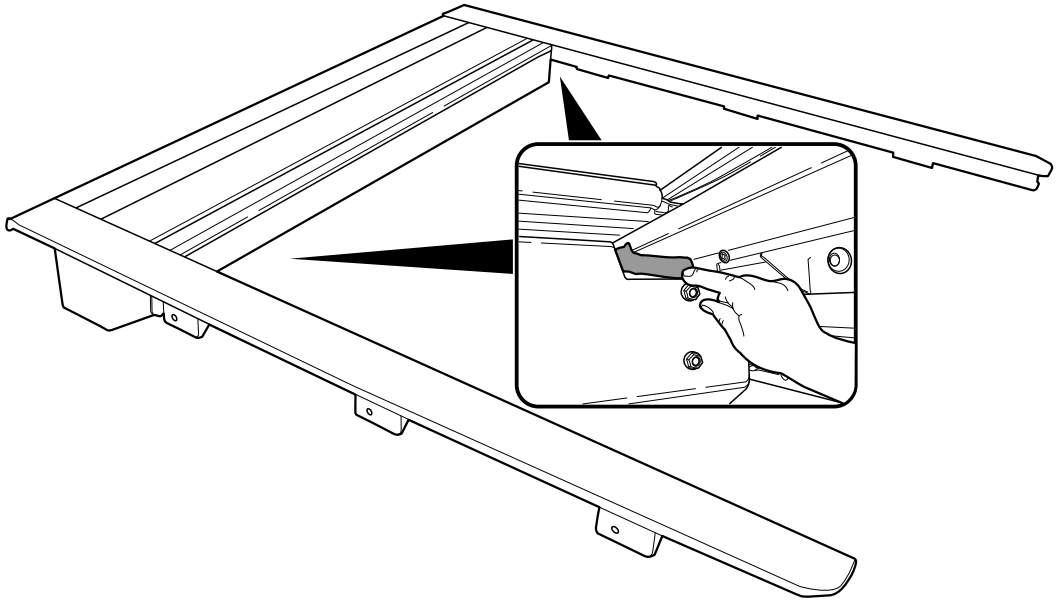

© Roll Я Cover

Step 15

Apply tar sealant to both sides of the canister as shown (where accessible).

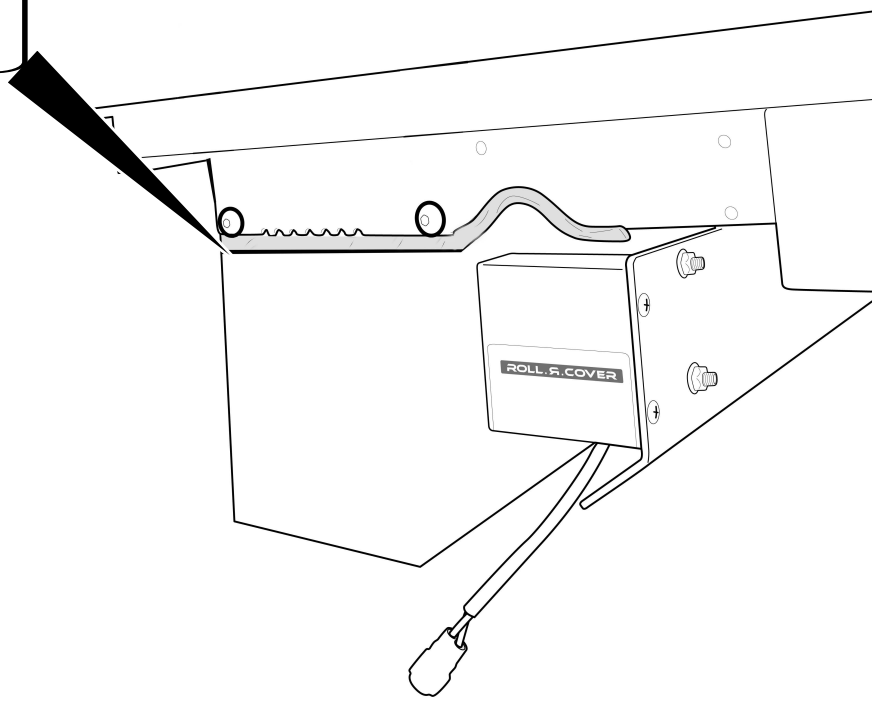

Step 16

Turn sports bars upside down on a clean surface making sure to avoid damaging it.

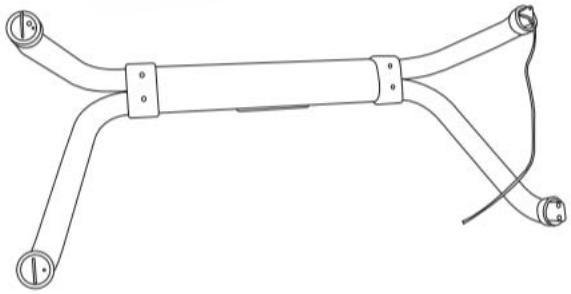

Locate 6mm thread on the front legs of the sports bar.

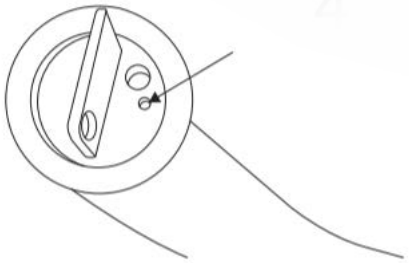

© Roll Я Cover

Step 17

Place M6 grub screw on the front leg factory M6 thread.

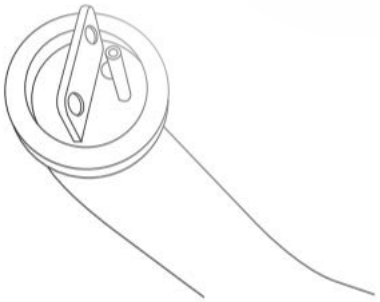

Tighten with allen key leaving 25mm of thread.

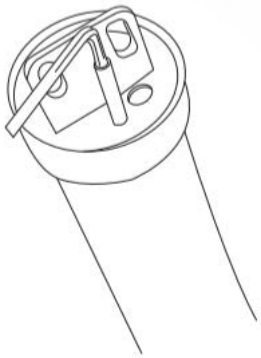

Step 18

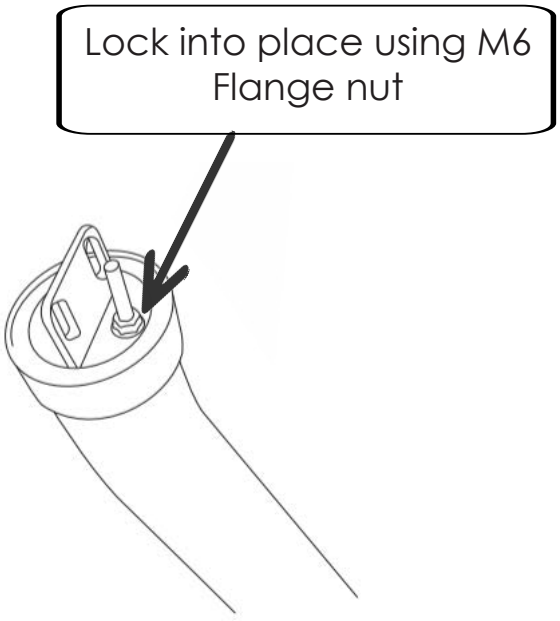

© Roll Я Cover

Step 19

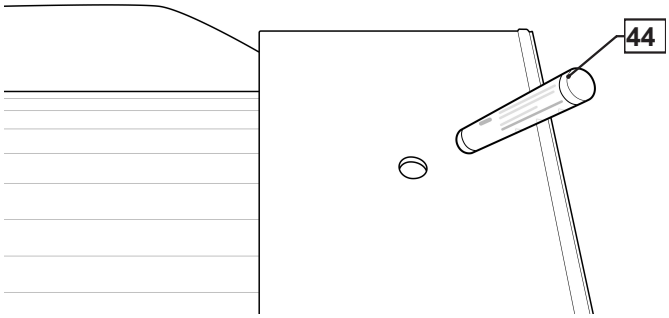

Apply 3M primer provided around side rail holes.

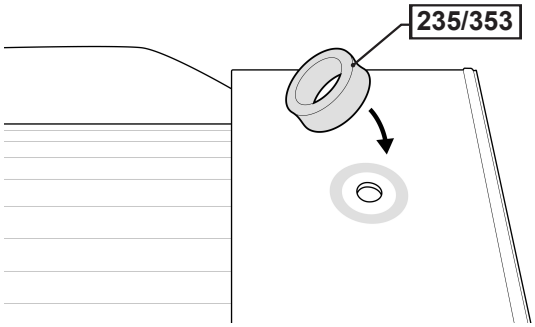

Peal away backing from foam sealant and stick to side rail. Front and rear gaskets are not identical.

Step 20

Repeat on all holes.

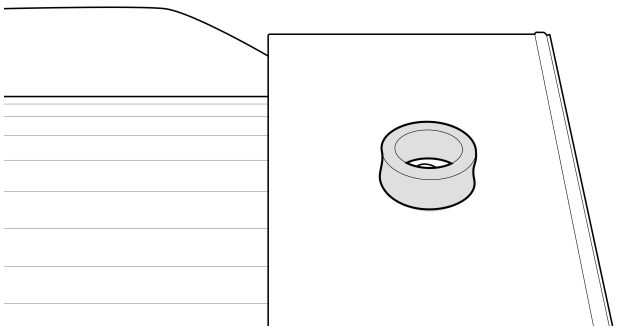

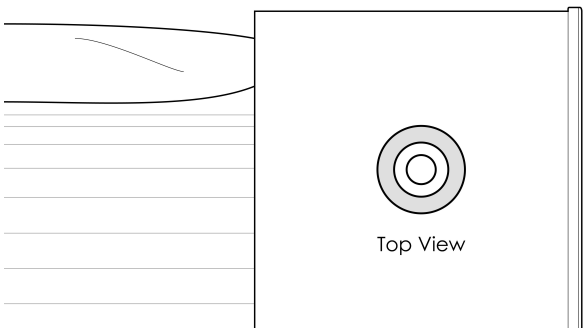

© Roll Я Cover

Step 21

Place Sportsbar on Roll R cover

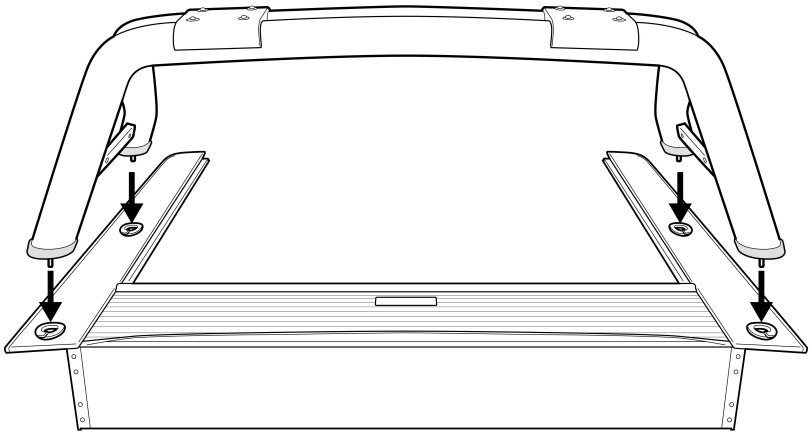

Step 22

Front leg of the Sportsbar.

Place flat plate through the thread, flat washer and tighten with the nylock nut provided at 6NM

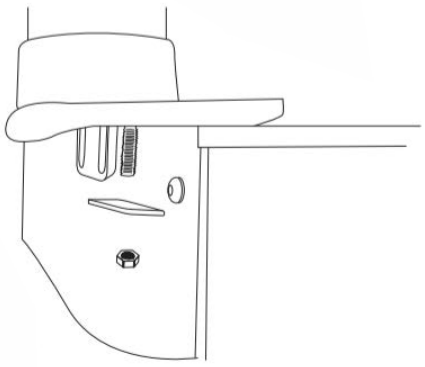

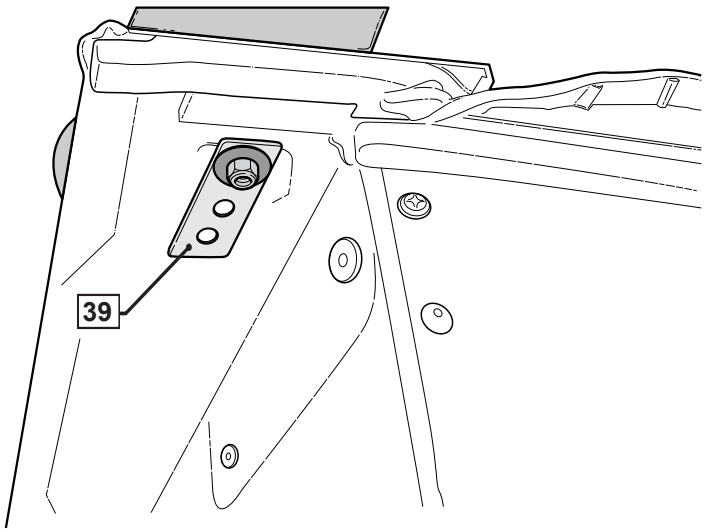

Note - Do not overtighten

© Roll Я Cover

Step 23

Run foam seal provided along the front of the tub to make headrail level with sides.

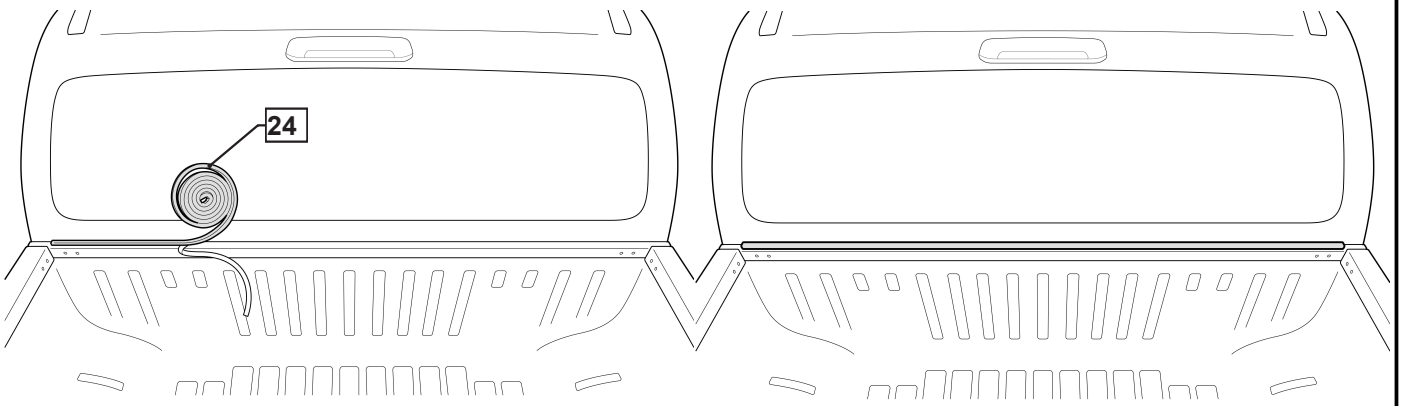

Step 24

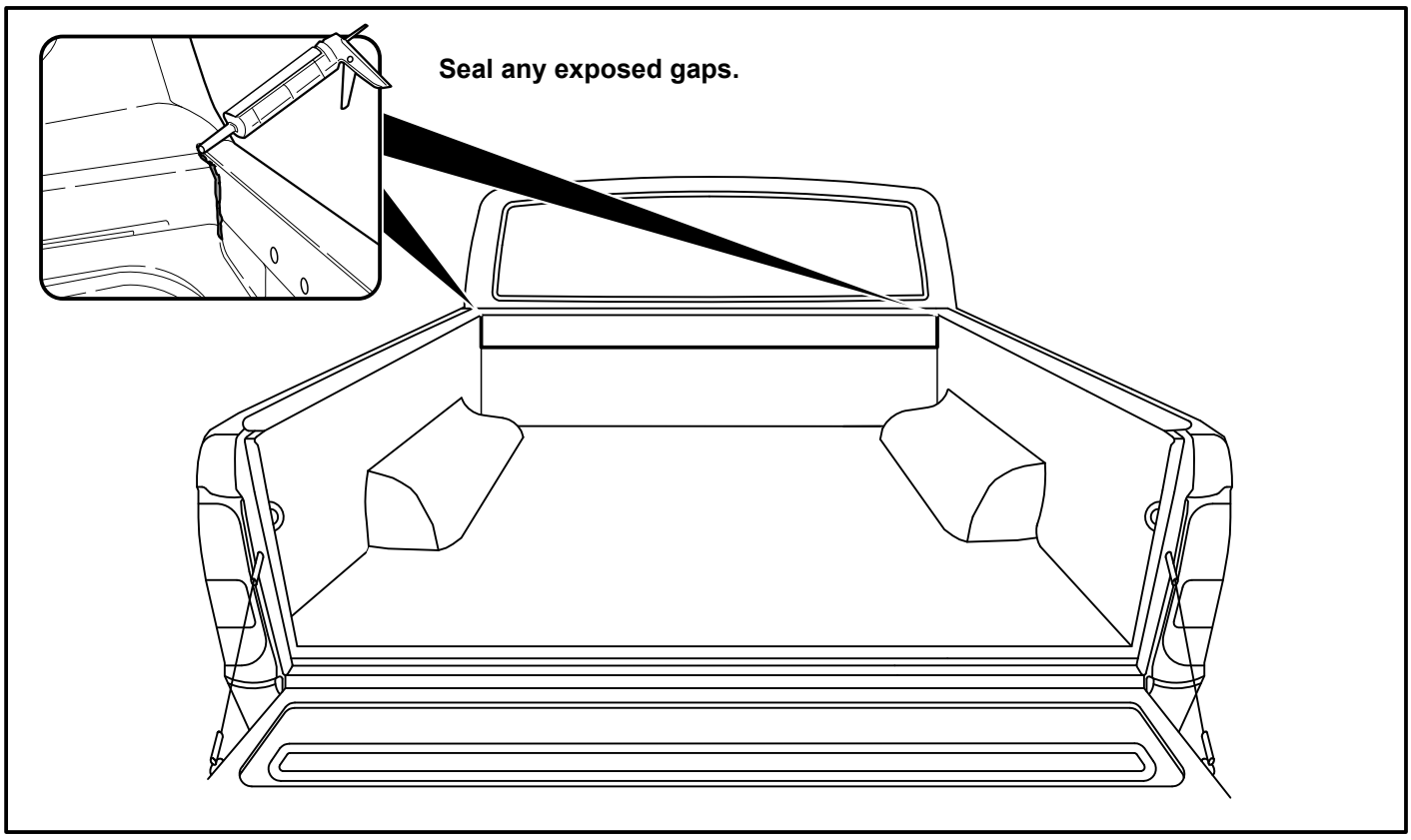

© Roll Я Cover

Step 25

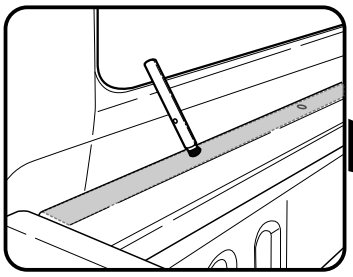

Apply 3mm primer

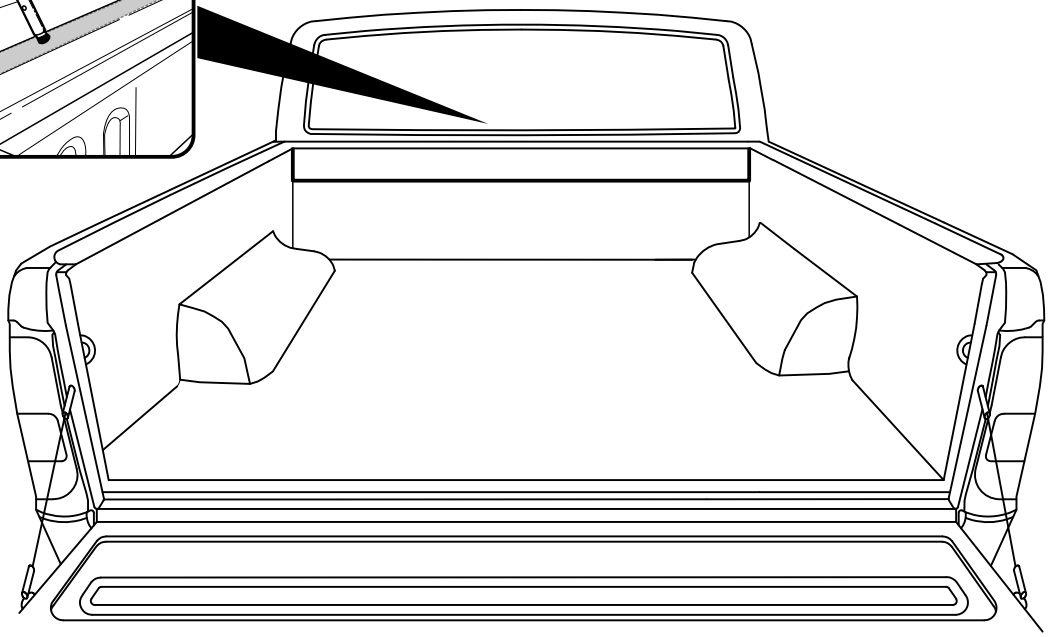

STEP 26

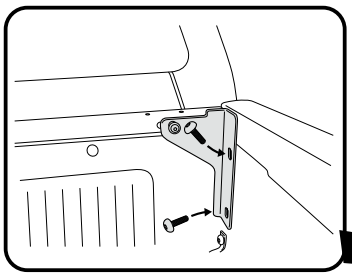

Attach the right angle baracket provided loosley with the reatined factory bolts to the left and right top corners of the tub.

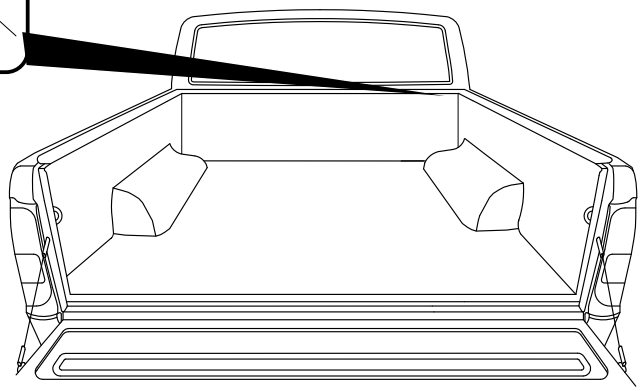

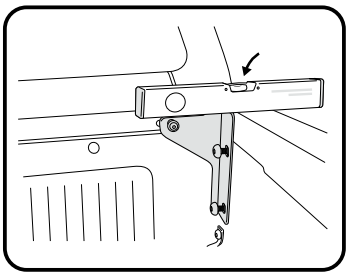

Using a spirit, make sure the top of the bracket is level with the top outside edge of the tub.

Then tighten all bolts to 6nm to avoid the bracket from moving.

© Roll Я Cover

Step 26

Installing the Roll-R-Cover

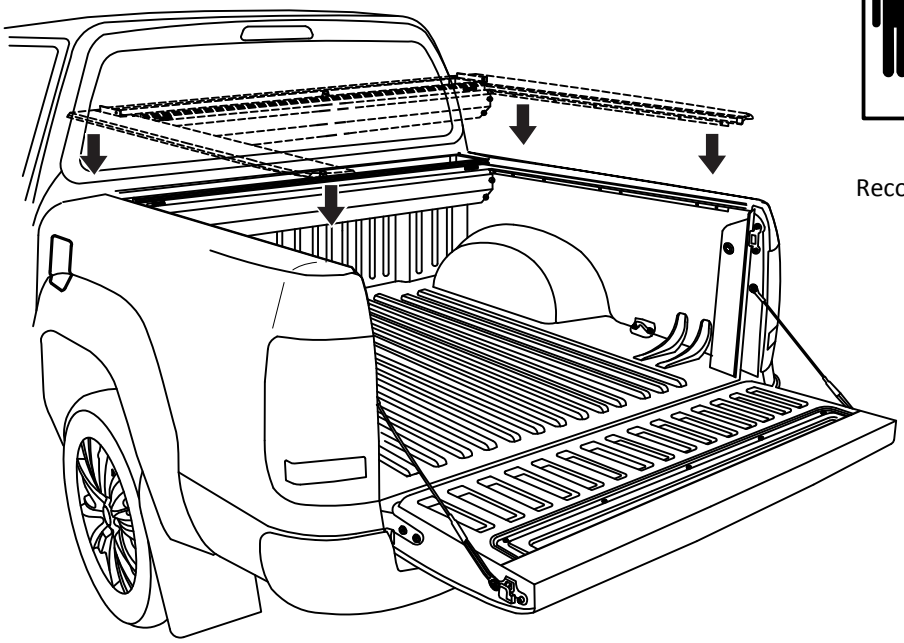

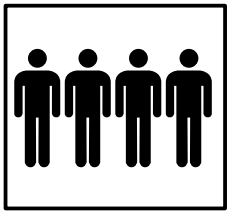

4 People
Recommended for lift

Step 27

Before dropping the Roll R cover into place on the tub, connect all relevant connections or plugs to the receiver and motor plug connection.

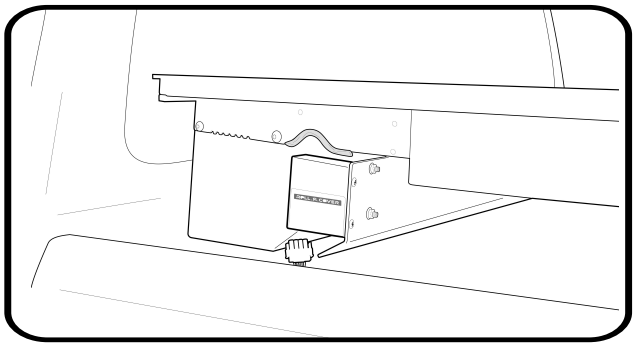

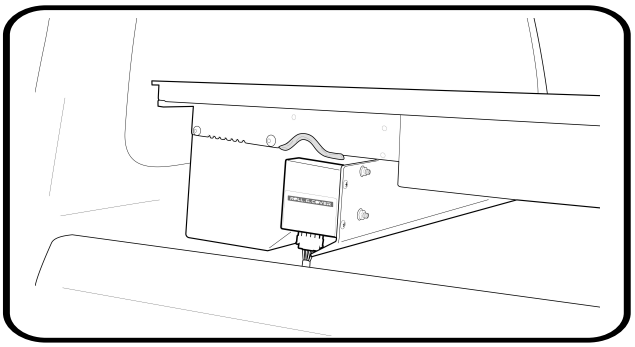

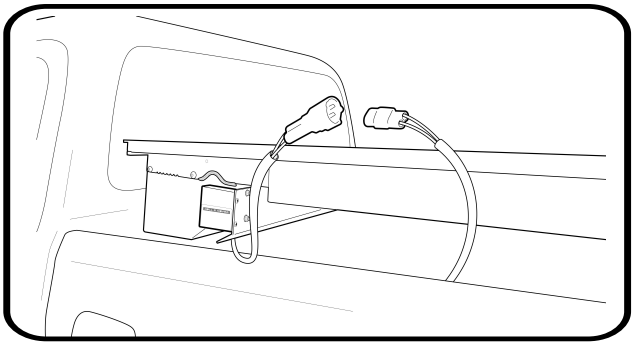

© Roll Я Cover

Step 28

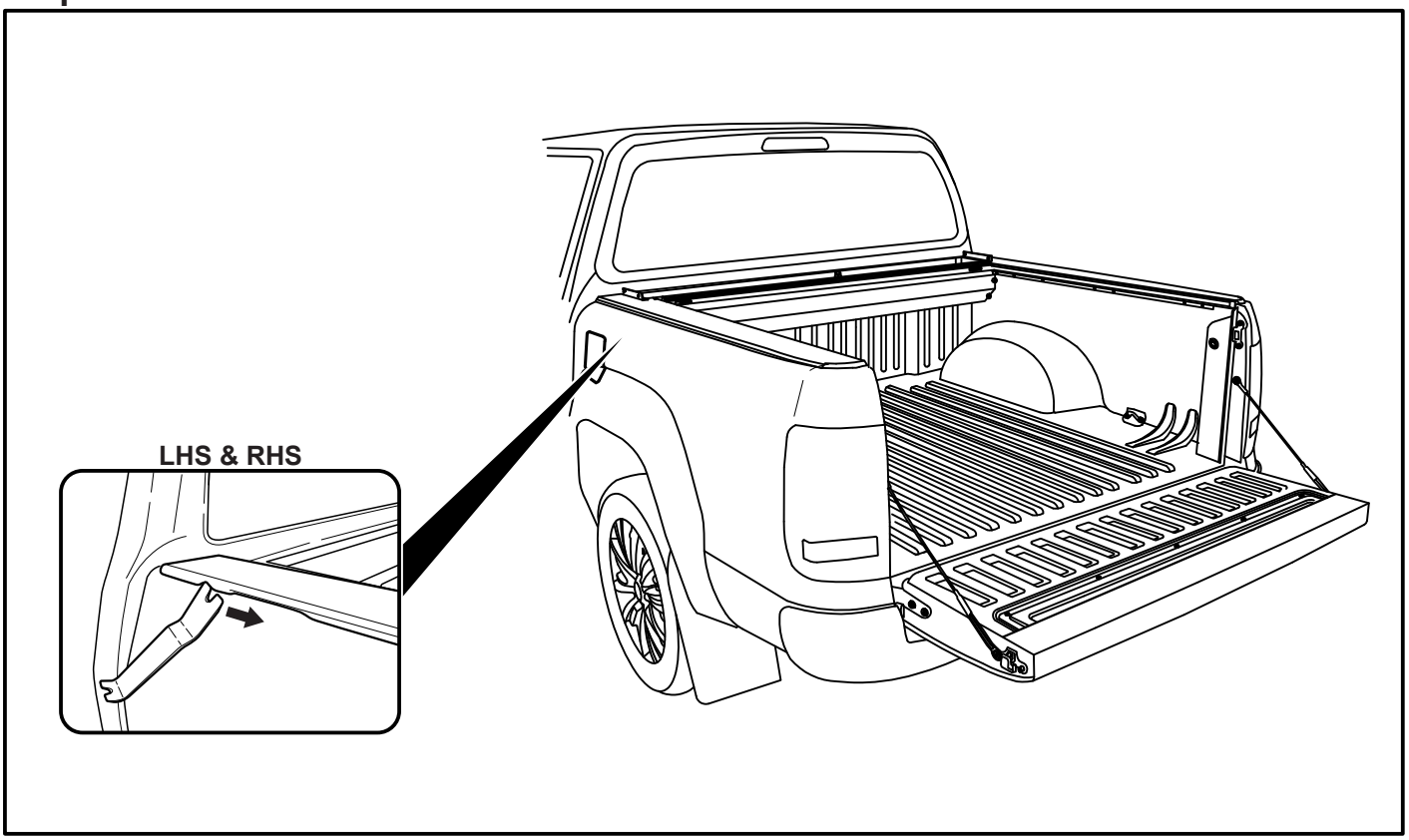

Step 29

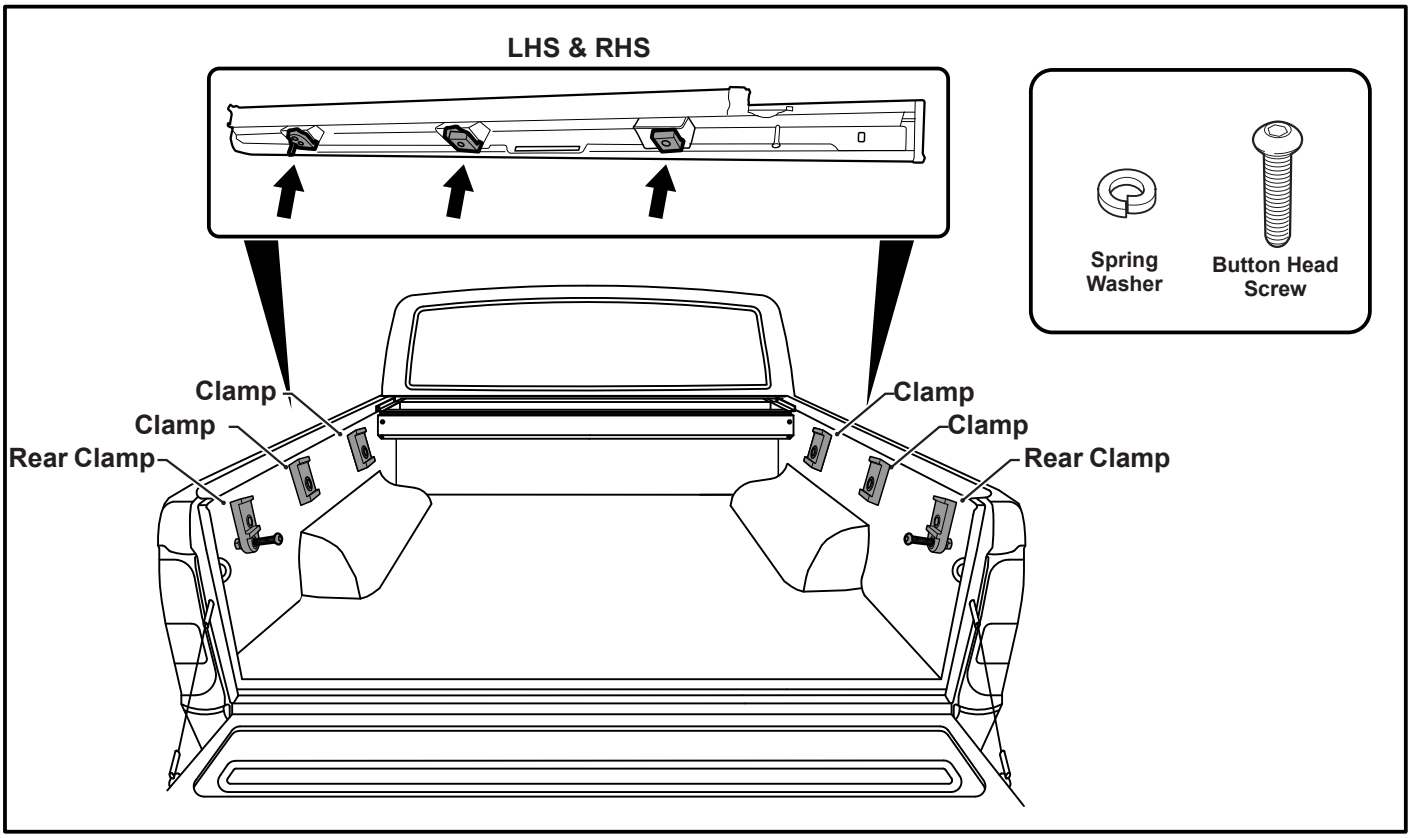

© Roll Я Cover

Step 30

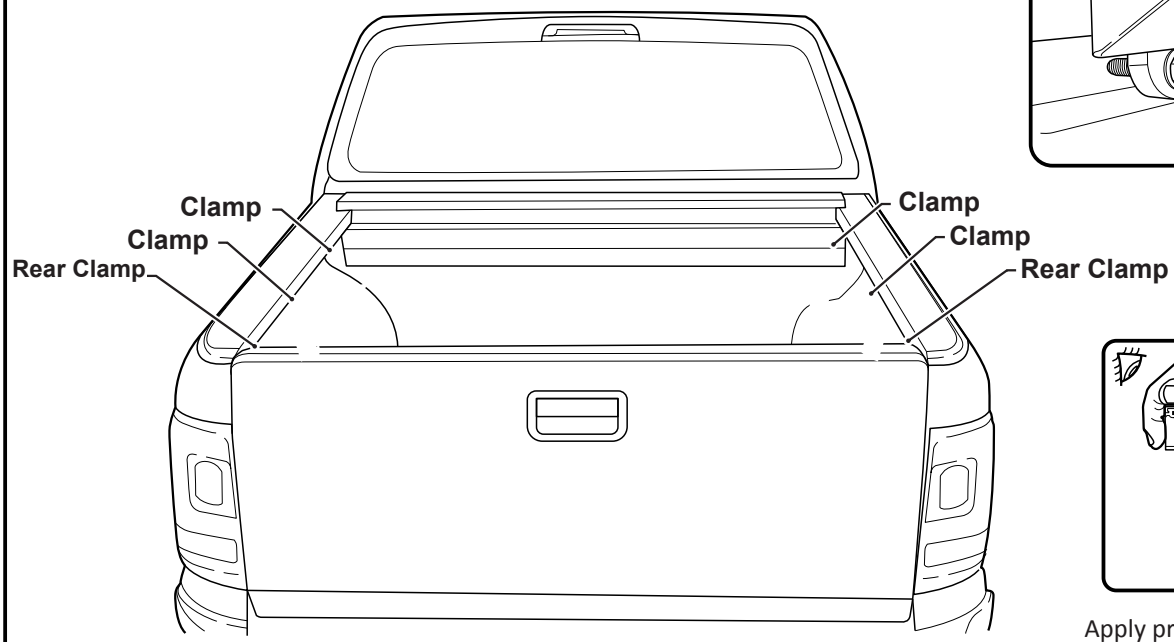

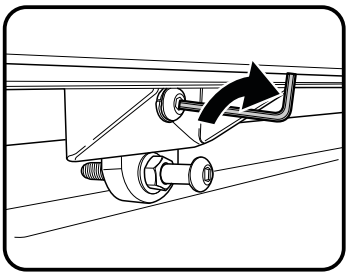

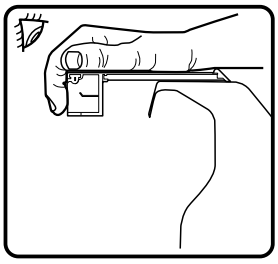

Apply pressure then tighten clamps

Step 31

Using the retained nut and bolt when removing the sports bar, fasten the rear leg with it.

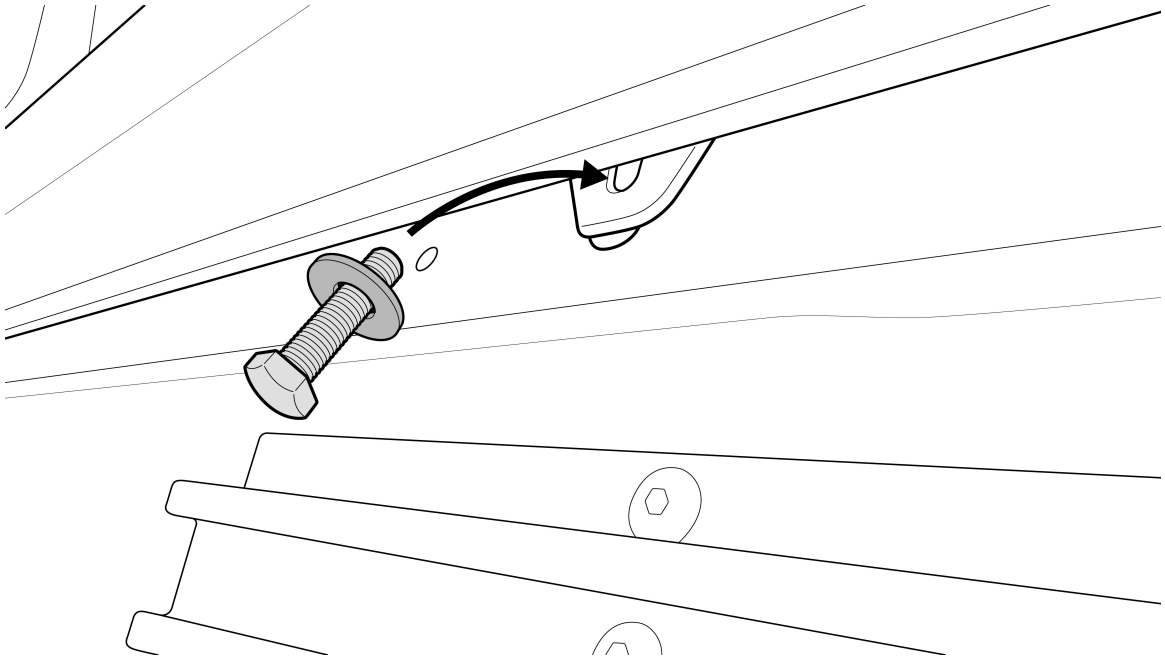

© Roll Я Cover

Step 32

If curtain doesn't meet the tailgate in it's fully closed position, loosen the clamps and shift the unit back.

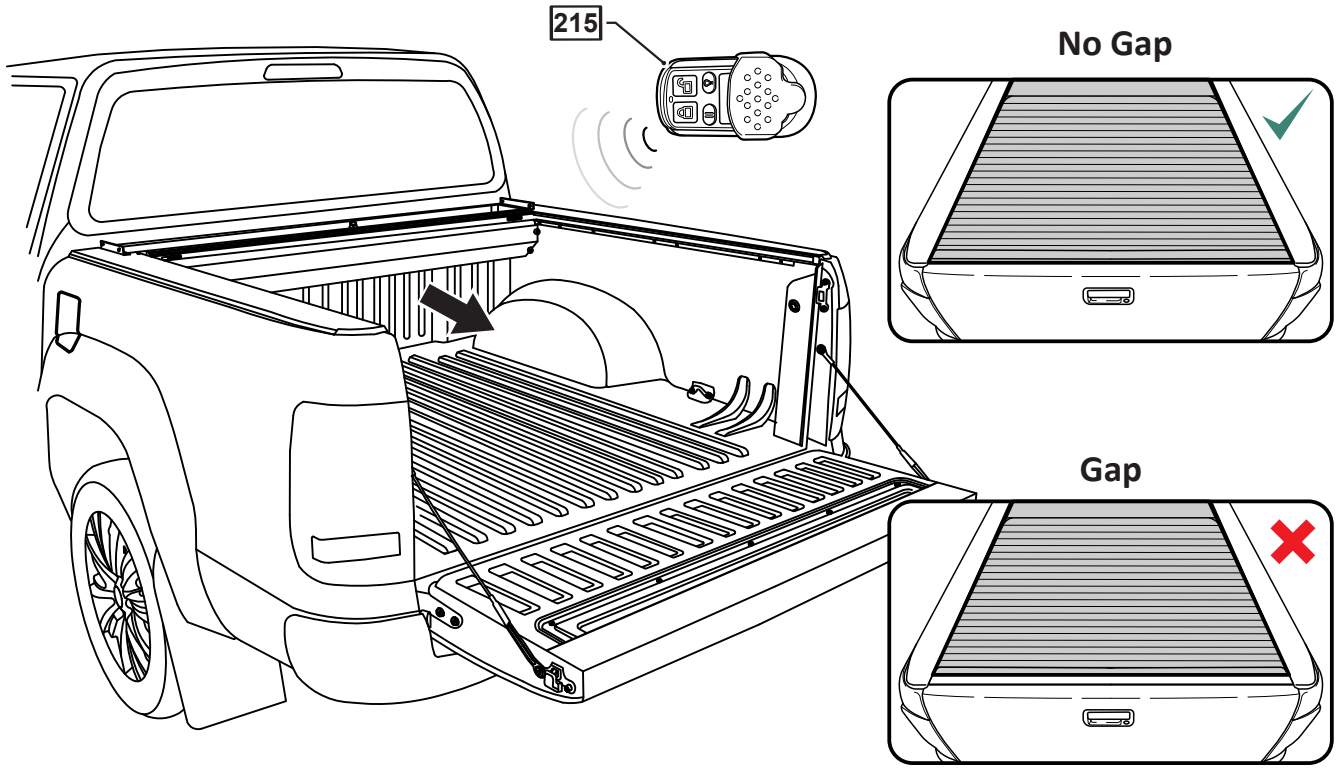

Step 33

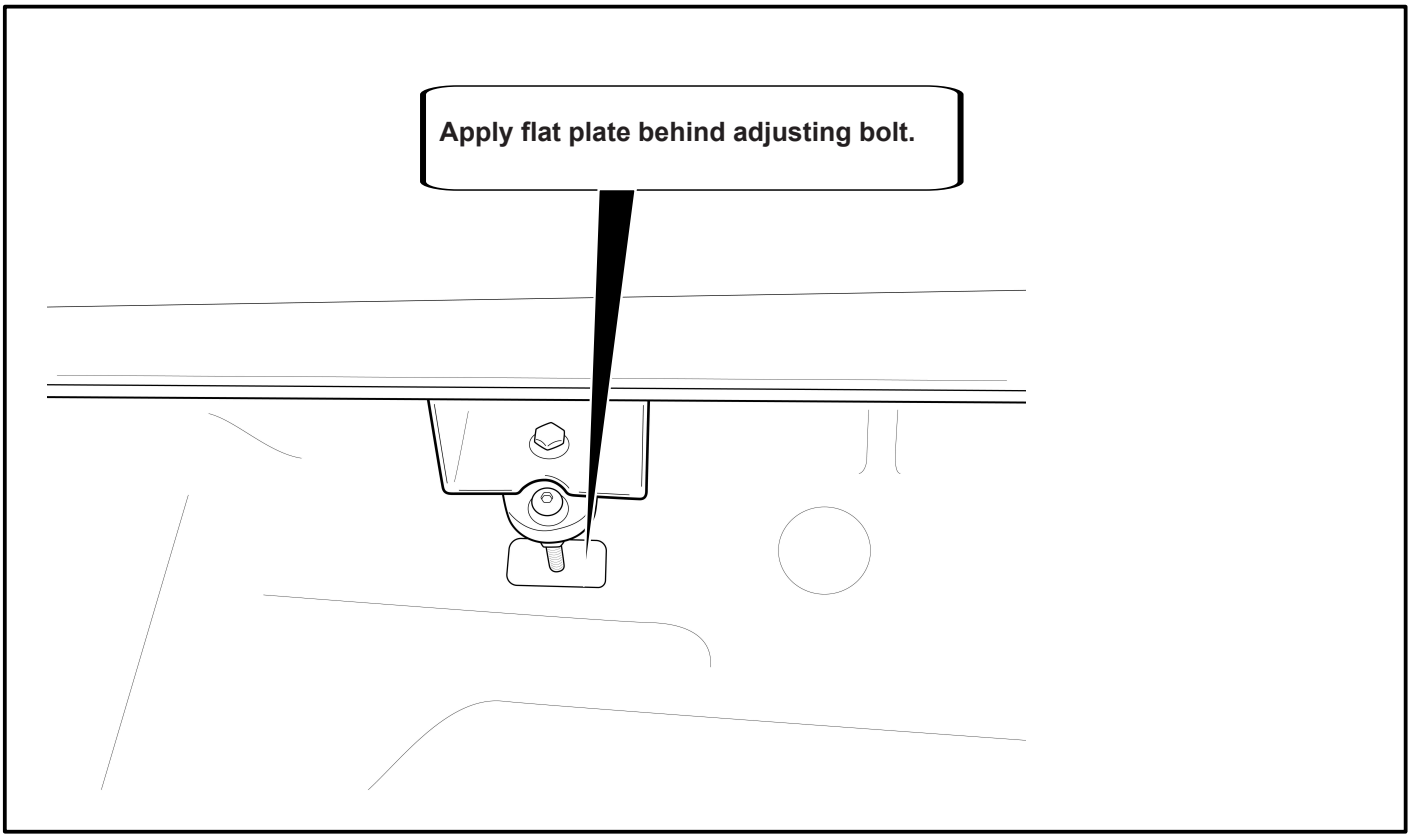

© Roll Я Cover

Step 34

Side rail rubber must have a 2mm gap from the top of the tailgate in the closed position.

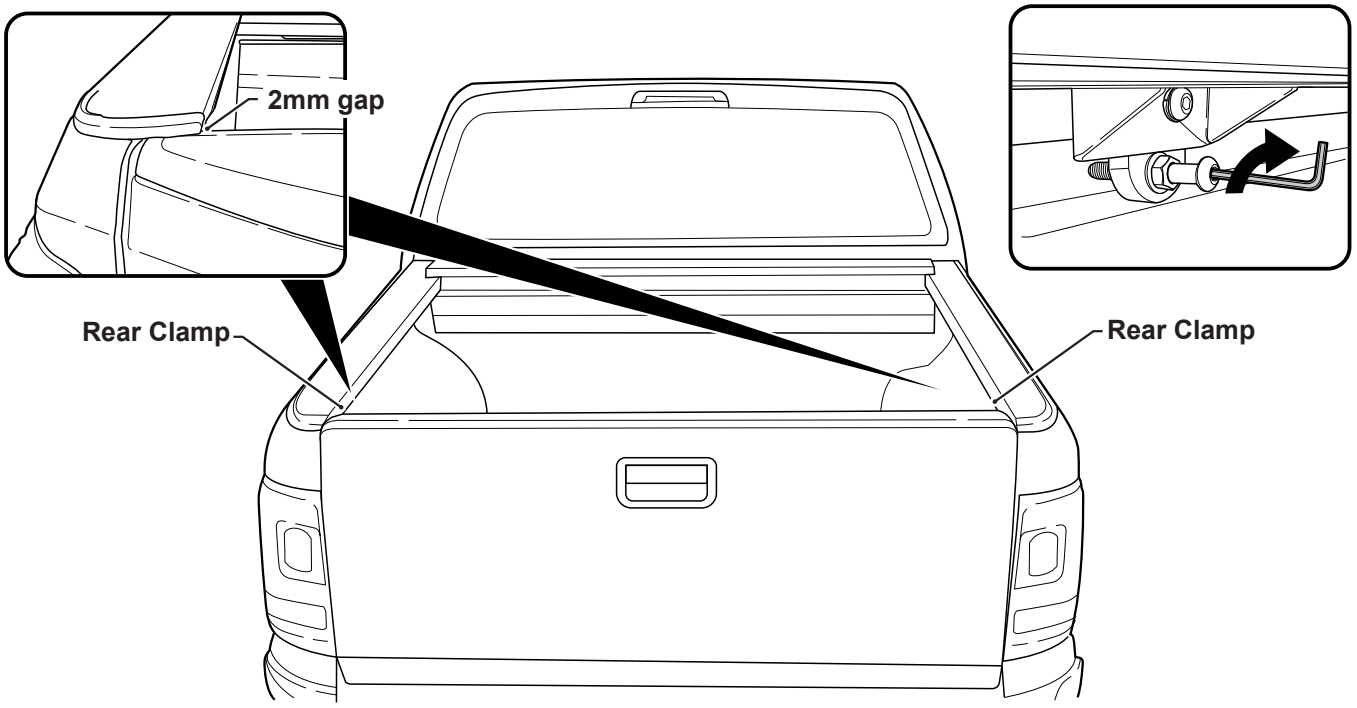

Rear clamp has an adjustment bolt. Drive the bolt in to lift the rear of the side rail till it clears the tailgate.

Step 35

Peal double sided tape backing off and stick to vehicle.

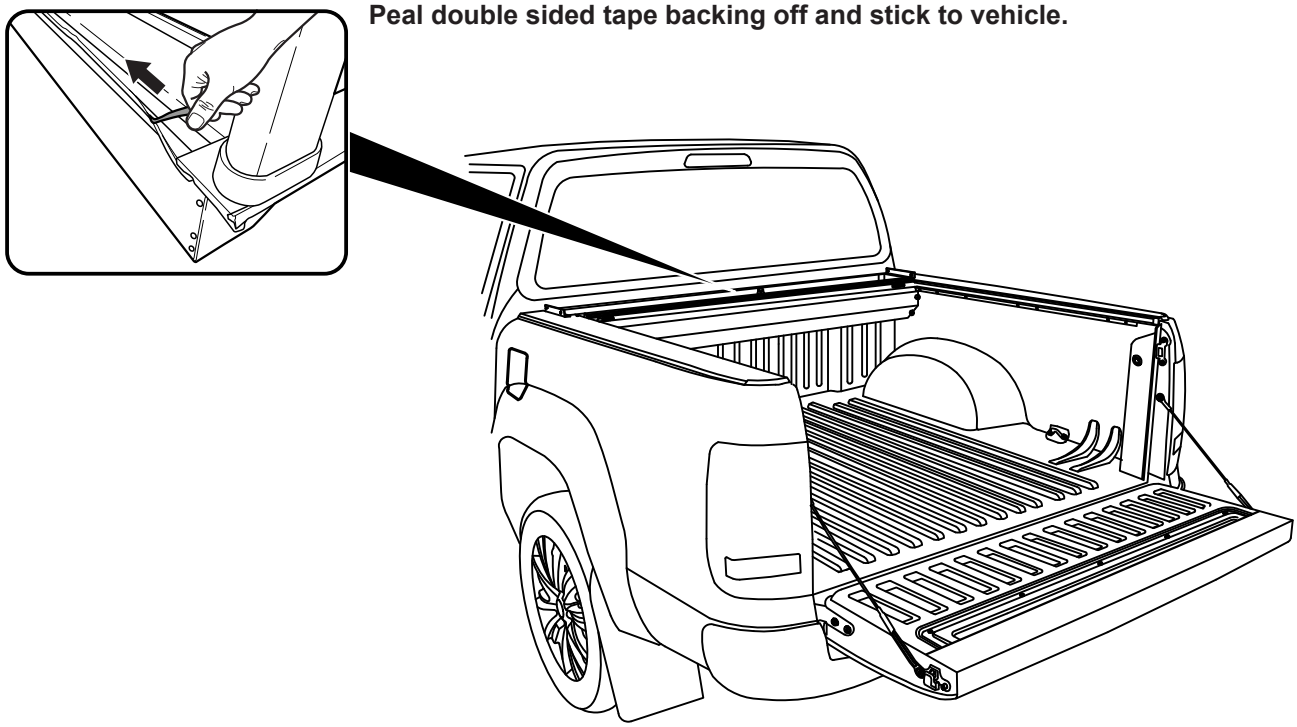

© Roll Я Cover

Step 36

Drill through bed and liner (check for obstructions).

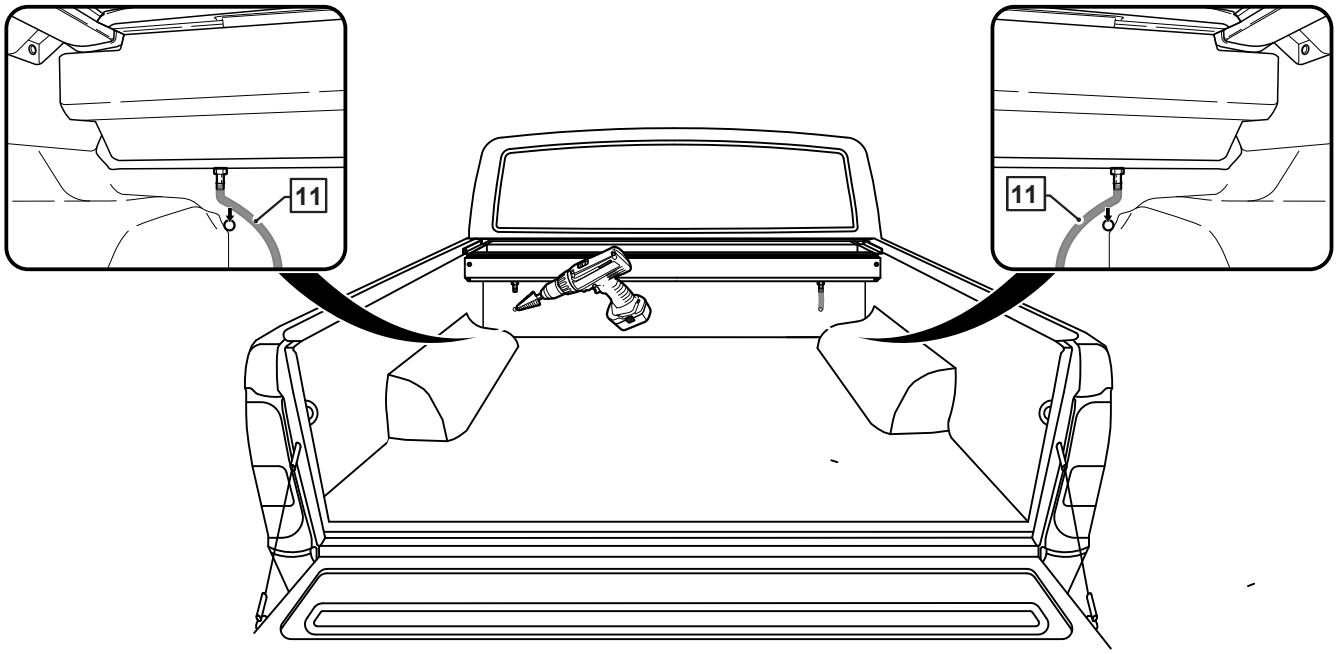

Step 37

Remove the tail light to check for obstructions before drilling

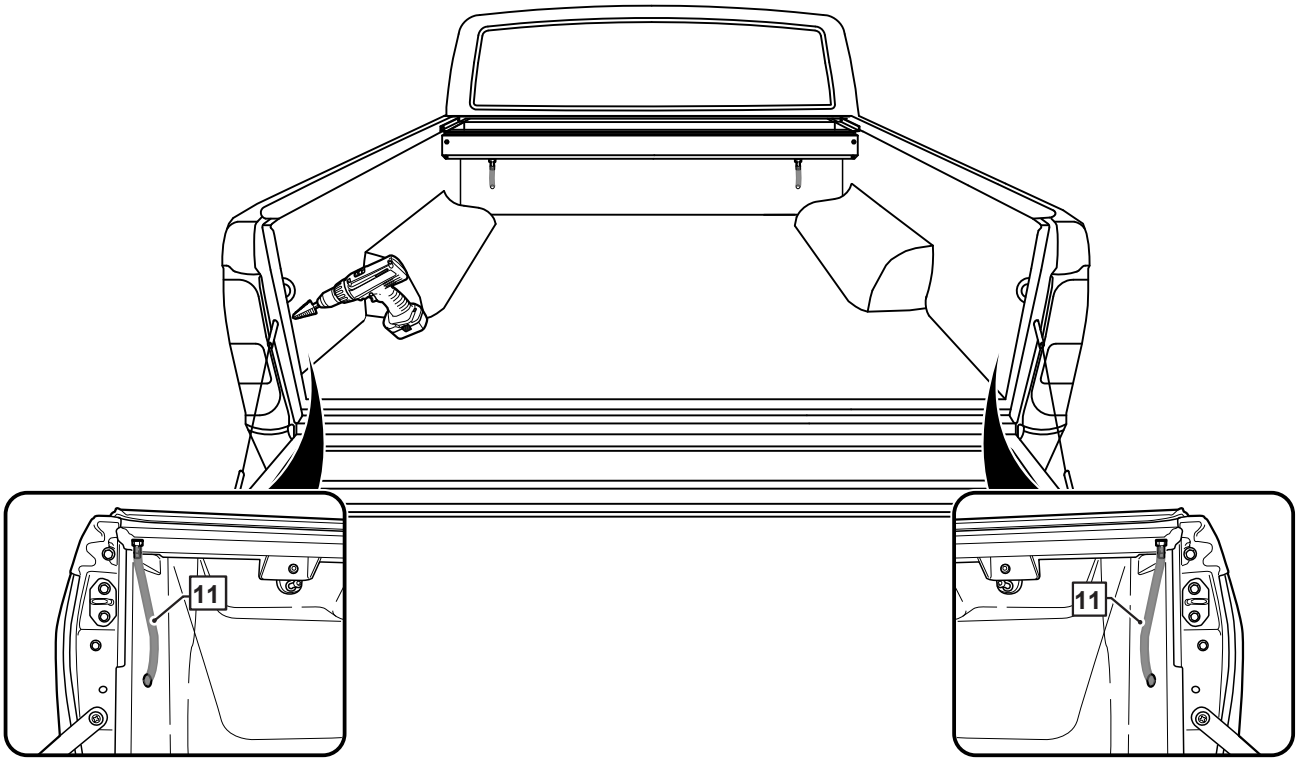

© Roll Я Cover

Step 38

Snap fit the top cover.

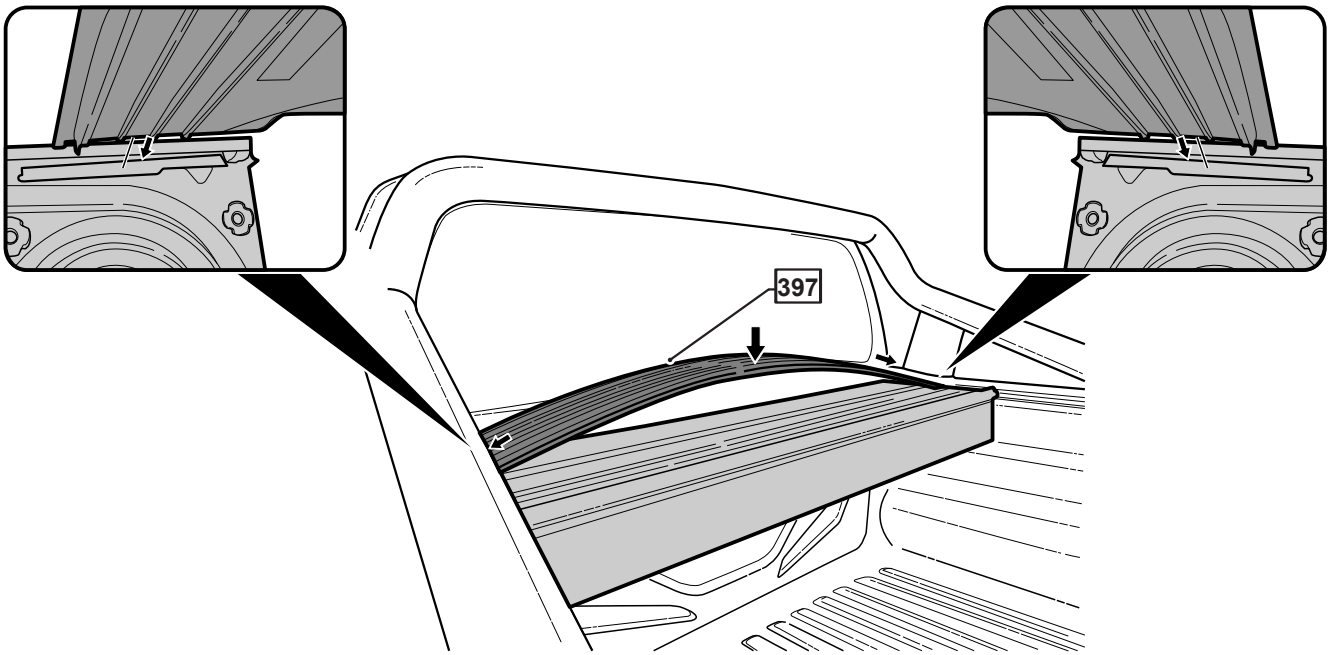

Step 39

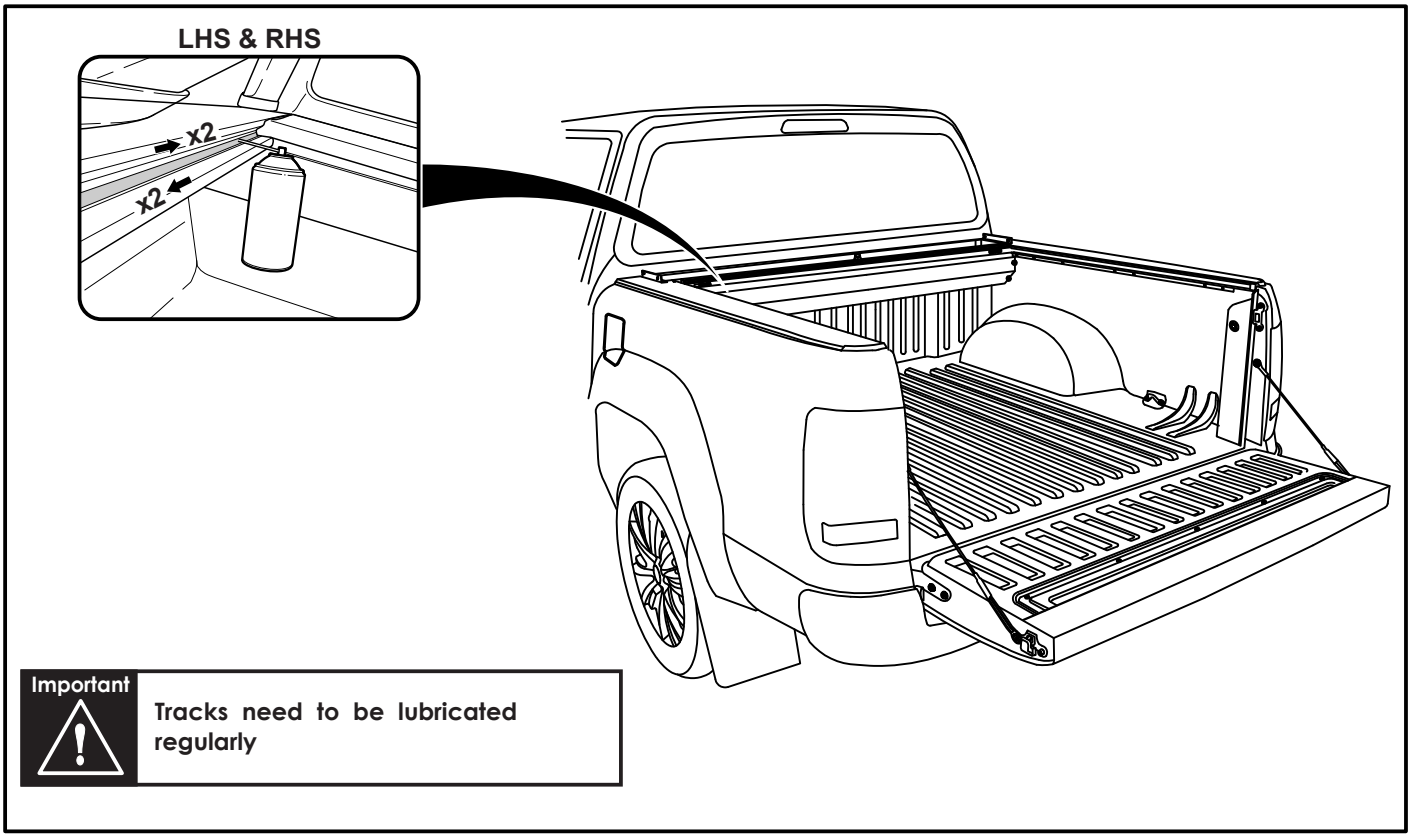

Important

Tracks need to be lubricated regularly

© Roll Я Cover

Step 40

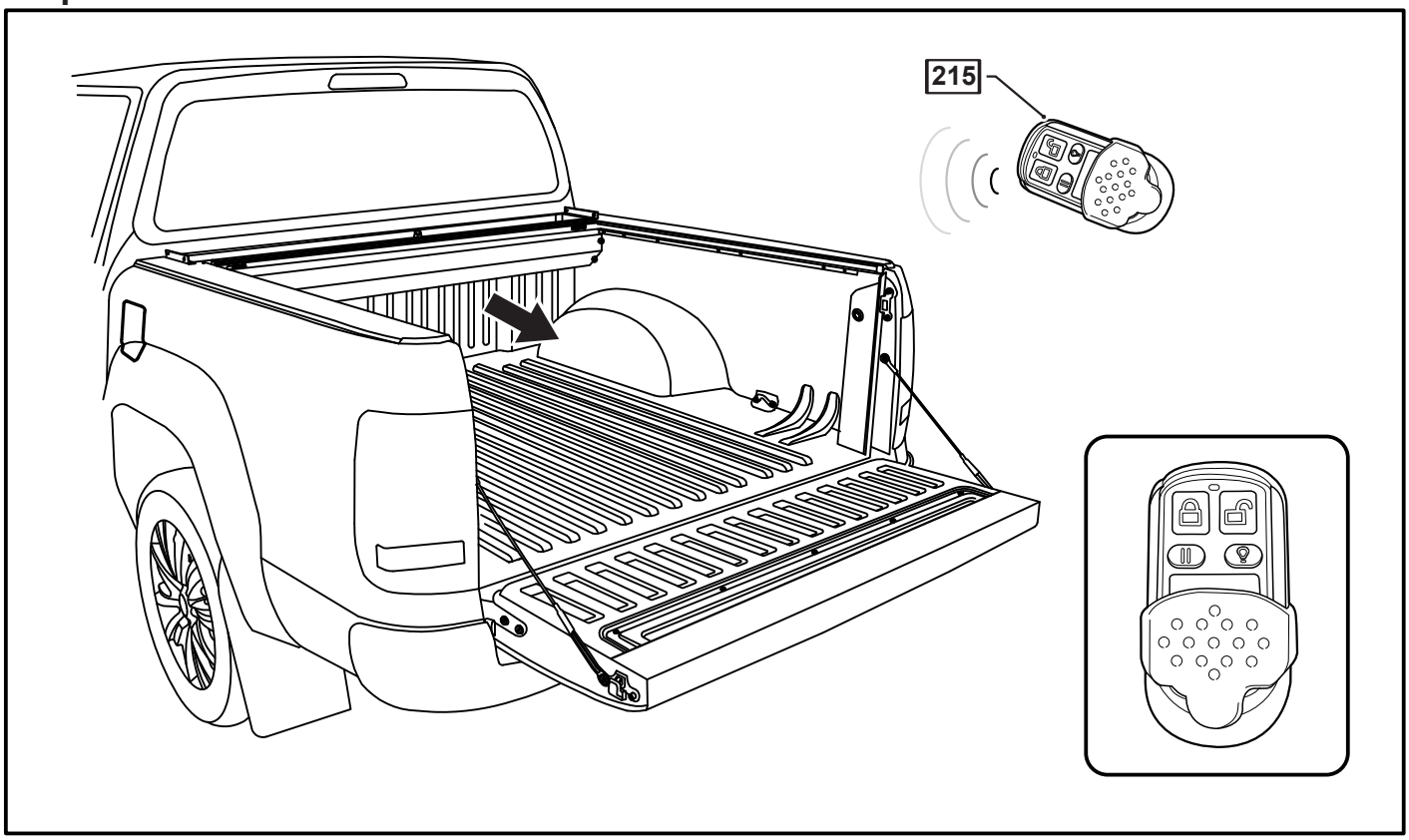

Step 41

Important

You may open tailgate when Roll R Cover is in closed position, however you MUST NOT close the tailgate when Roll R Cover curtain is in the fully closed position.

E. & O.E. This document is copyright and must not be used except as permitted below or under the Copyright Act 1968. You may reproduce and publish this document in whole or in part for your or your organisation's own personal or internal compliance, educational or non-commercial purposes. You must not alter or amend this document in any way. You must not reproduce or publish this document for commercial gain without the prior written consent of the copyright owner.