WWW.HSPUTELIDS.COM

Part No: P43R

Fitting Time: 180 minutes

ROLL.Я.COVER

To suit Ford Ranger PX 2011+ with Tickford extended sports bars

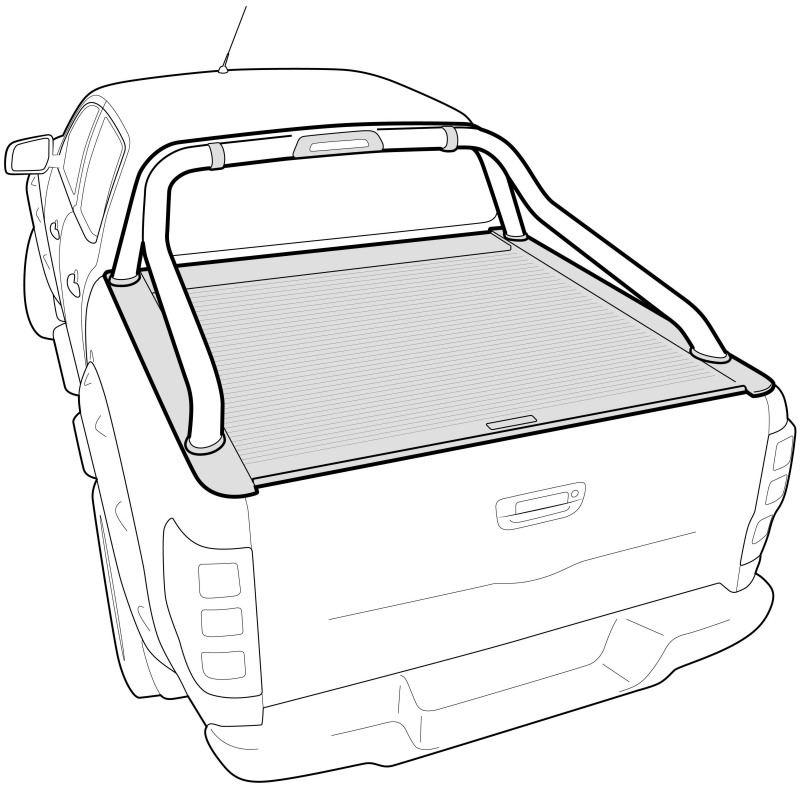

Roll-R-Cover

Fitting Instructions

© Roll Я Cover

General Notes

- Read through the fitting instructions before installation of accessory.
- Always install the Roll Я Cover Wiring Kit following the workshop manual and fitting instructions provided. Failure to do so may cause damage to the vehicle or the accessory.
- Ensure all recyclable components and packaging are discarded and recycled following local recycling regulations.
- It is always recommended that the Roll Я Cover Wiring Kit is fitted by a qualified automotive technician.
- Safely store and protect any removed vehicle components.

Safety Notes

- Check that all work practices comply with safety standards.
- Please wear appropriate clothing and use safety equipment.

Fitting Time

180 minutes

Parts Supplied

P43R	DUAL CAB FORD RANGER PX & PU - ROLL R COVER WITH TRICKFORD EXTENDED SPORT BAR KIT		
PART DESCRIPTION	PART NUMBER	QUANTITY/LENGTH	CHECK
P43R FITTING INSTRUCTIONS	383*	1	
LUBRICANT PUMP SPRAY	47*	1	
REMOTE	215*	2	
PRIMER STICK	44*	1	
CABLE TIE 4.8X300MM	217*	10	
ROLL R LOOM	216*	1	
P4R CANISTER AND CURTAIN	277*	1	
P43R RAIL RIGHTHAND	335*	1	
P43R RAIL LEFTHAND	336*	1	
P(1) GASKET	228*	2	
P(2) GASKET	230*	2	
P1 BRACKET	37*	2	
P2 BRACKET	38*	2	
3 HOLE PLATE	39*	2	
BLACK NITRILE FOAM 6MMX25MMX1.6M	391	1	
M8 NYLOC NUT	28*	4	
M8 FLAT WASHER	34	4	
SOCKET SCREW M8	394	4	
HOSE 600MM	11*	4	
COMPLETE CANISTER COVER	404	1	
OPERATION LEAFLET	66	1	
MAINTENANCE LEAFLET	67	1	
RIGHT ANGLE BRACE BRACKET	RBRH	1	
RIGHT ANGLE BRACE BRACKET	RBLH	1	
ADJUSTMENT PLATES	31	2	
BLACK PUTTY	3*	8	

© Roll Я Cover

The following steps are for vehicles fitted with a Sportsbar (kit will only work with OE Sportsbar).

Step 1

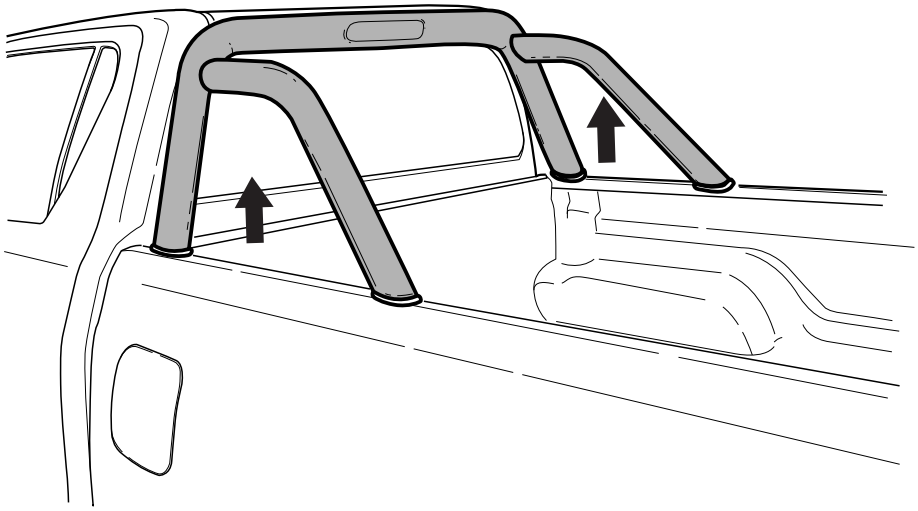

Remove Sports Bars from vehicle.

© Roll Я Cover

The following steps are for vehicles with bed liners.
If there are no bed liners installed move to Step 4

Step 2

Trim front of bed liner by 180mm from the top of the ute bed as shown.

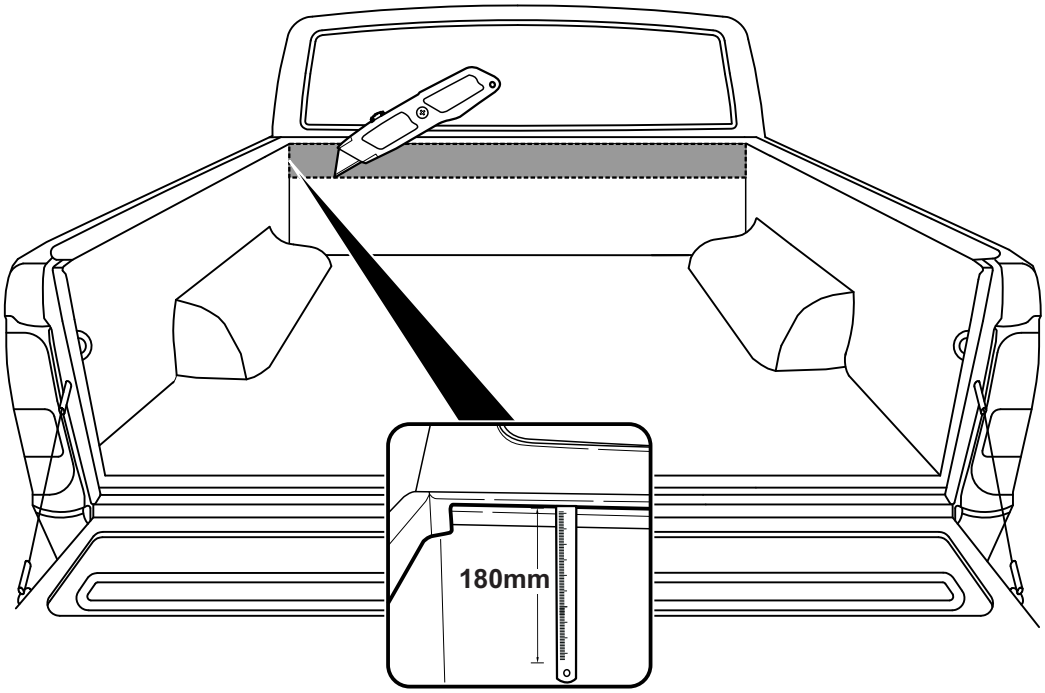

Step 3

Cut a 20mm split for bed liner to flex.

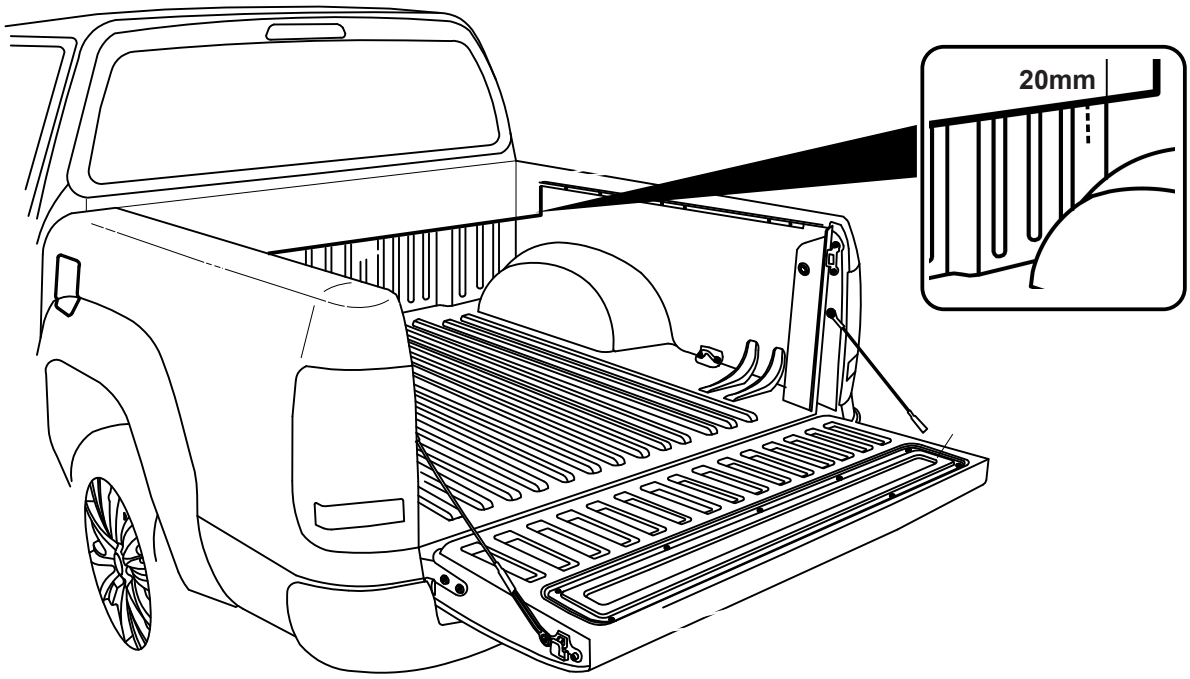

© Roll Я Cover

Step 4

Measure 20mm down from top of tailgate and trim tailgate liner.

Step 5

A

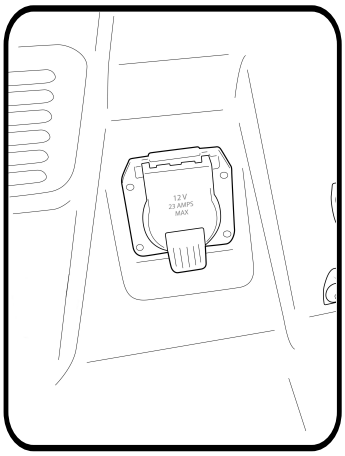

Remove unit and unplug from loom

B

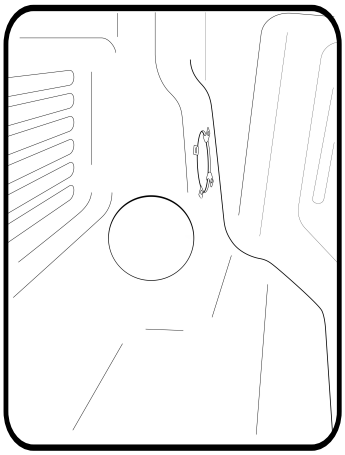

Make a 50mm hole

C

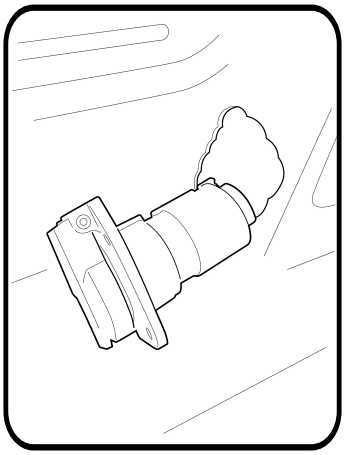

Feed loom through the hole and plug into power unit

D

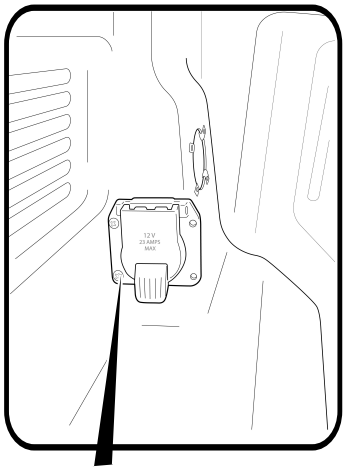

Secure power unit with two screws to the left only

© Roll Я Cover

Step 6

Roll-R-Cover preparation steps

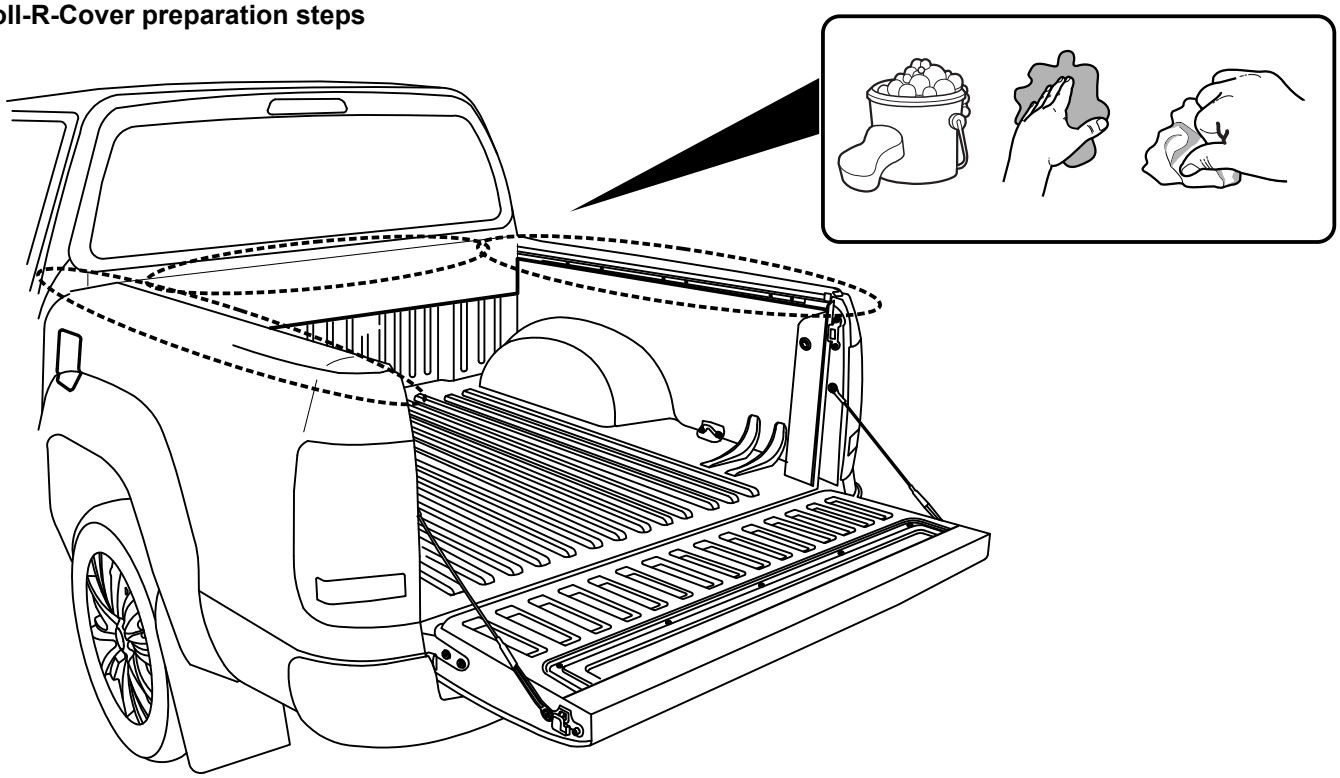

Step 7

Carefully unpack the box.

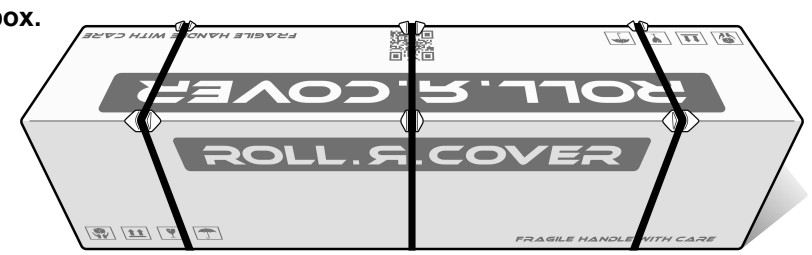

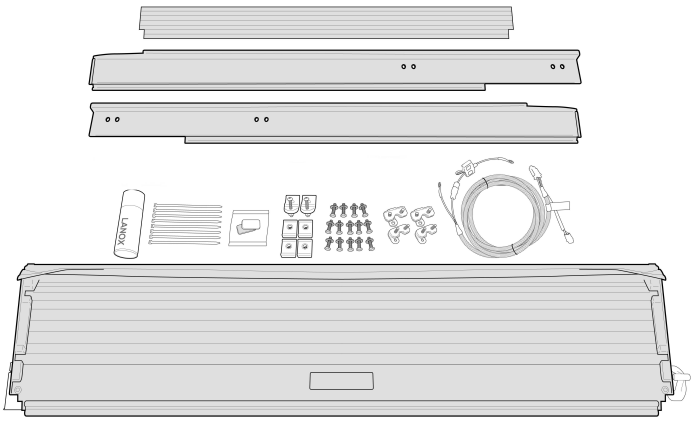

© Roll Я Cover

Step 8

Wiring Harness steps

1 **Feed through the cavity**

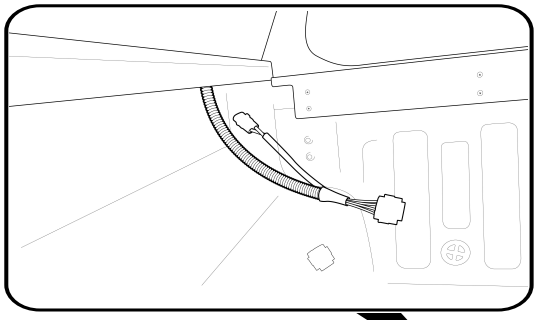

3

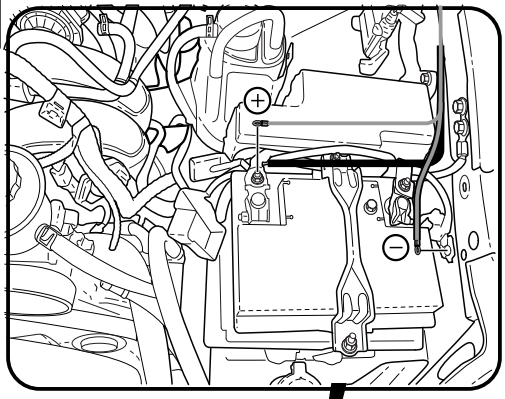

2

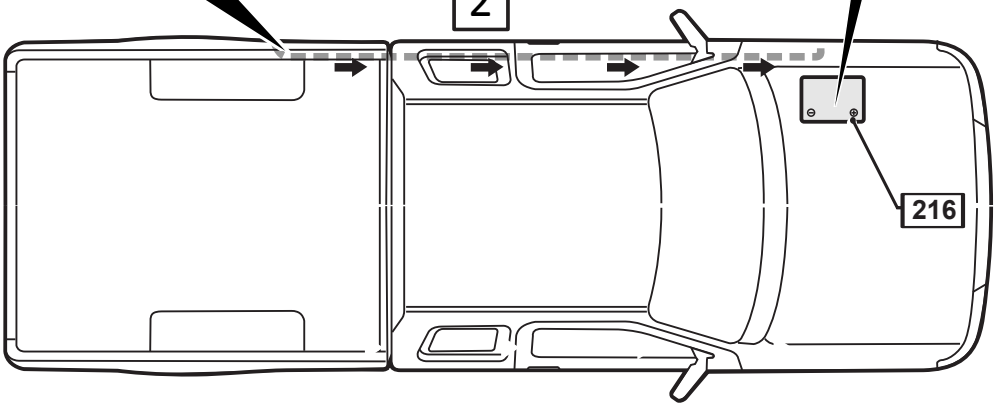

Run the wiring from the front corner cavity to the battery over the chassis rail. Making sure to keep away from hot obstructions and cable tie every 400mm.

Step 9

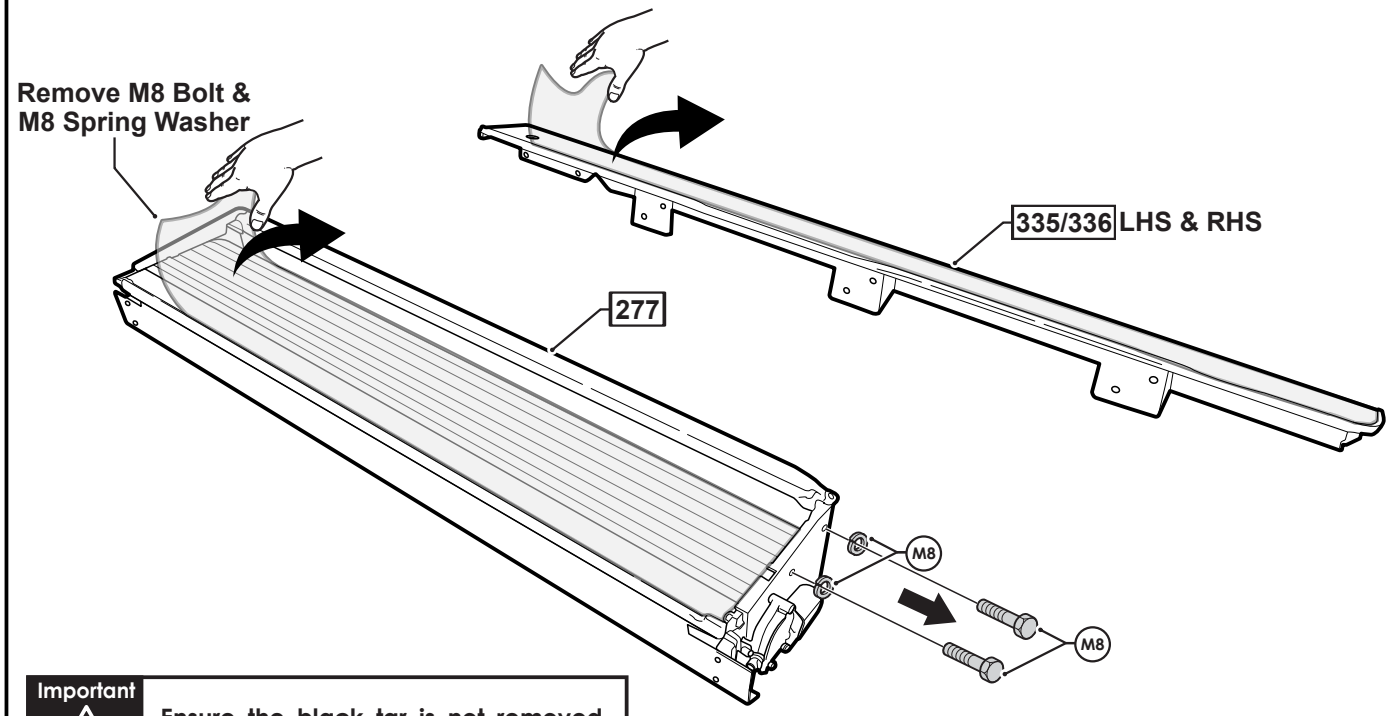

Important

Ensure the black tar is not removed with the film.

© Roll Я Cover

Step 10

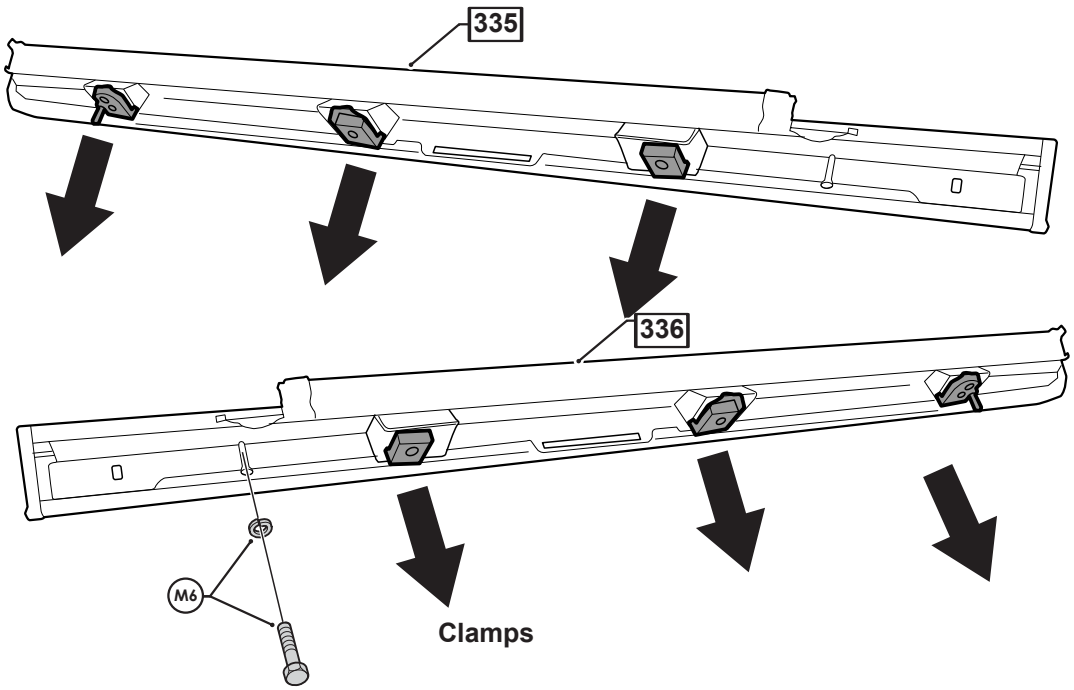

M6 Bolt and M6 Spring Washer is only on the RHS Side Rail

Step 11

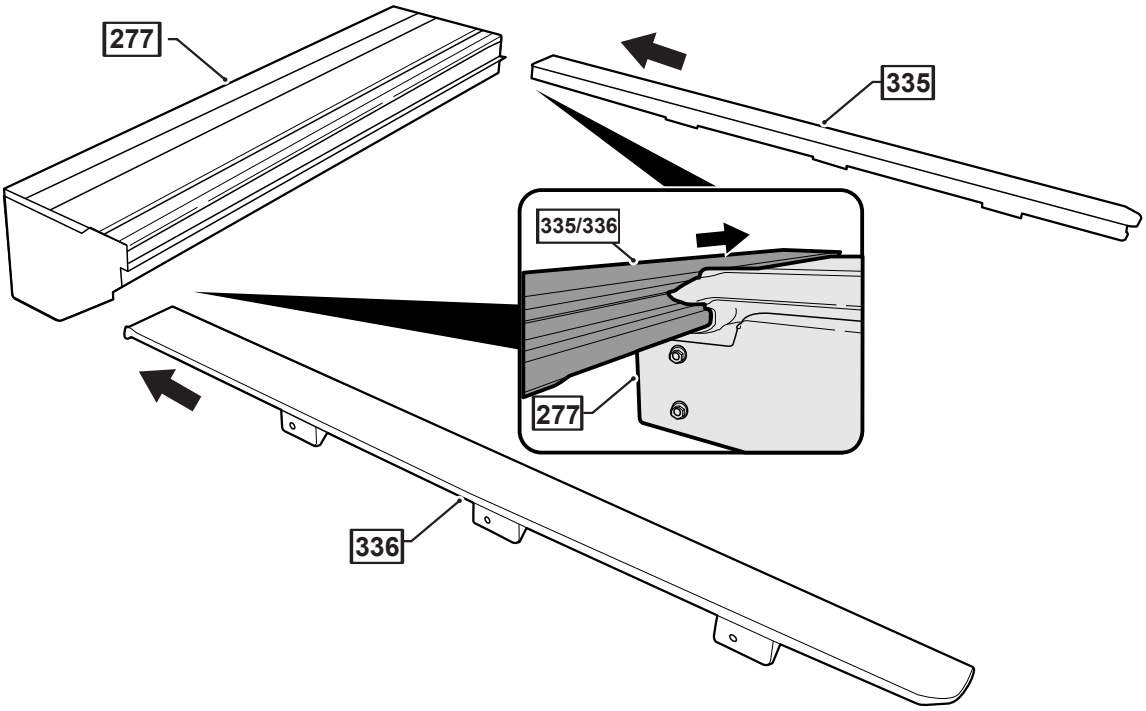

© Roll Я Cover

Step 12

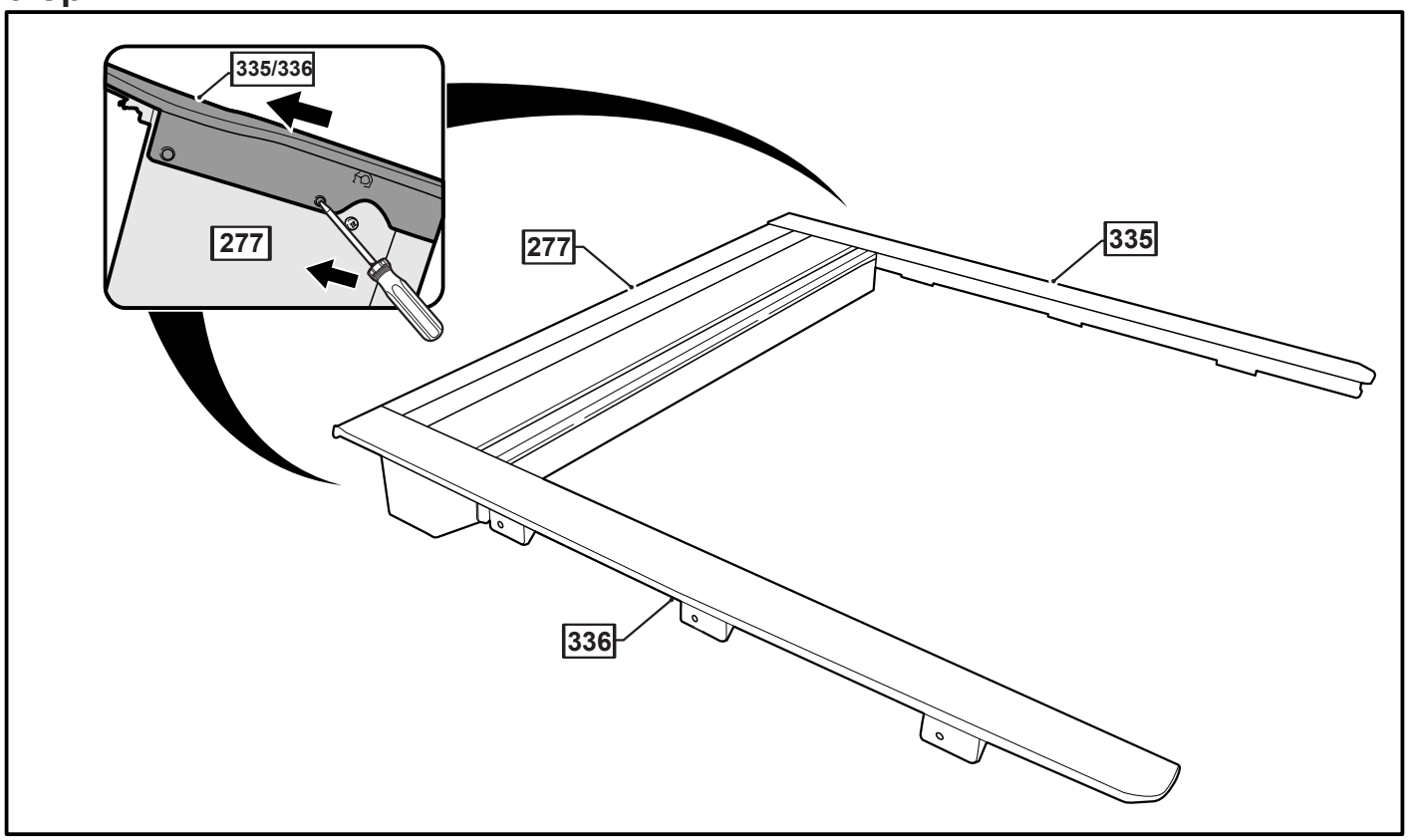

Step 13

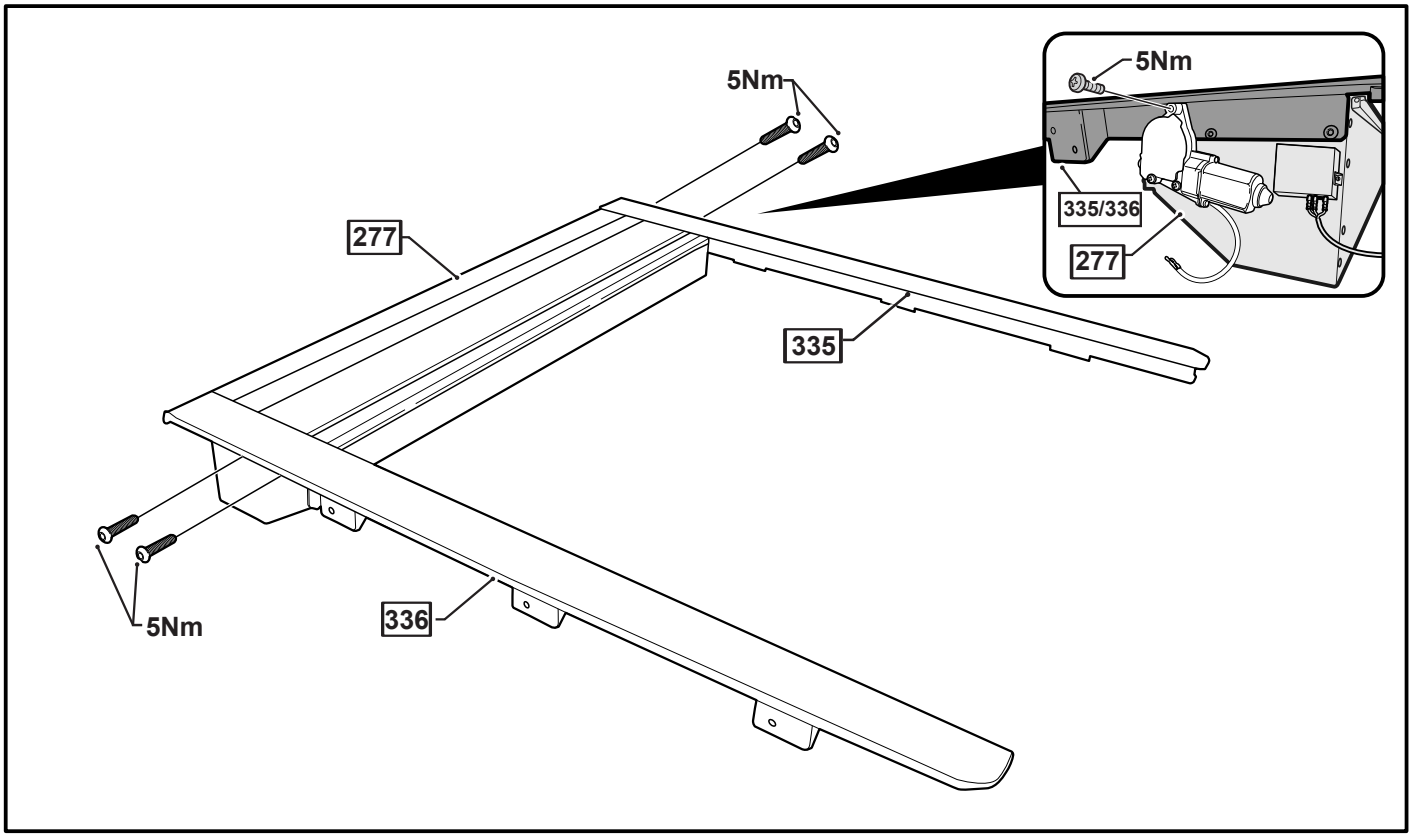

© Roll Я Cover

Step 14

Apply tar sealant to the gap under water channel.

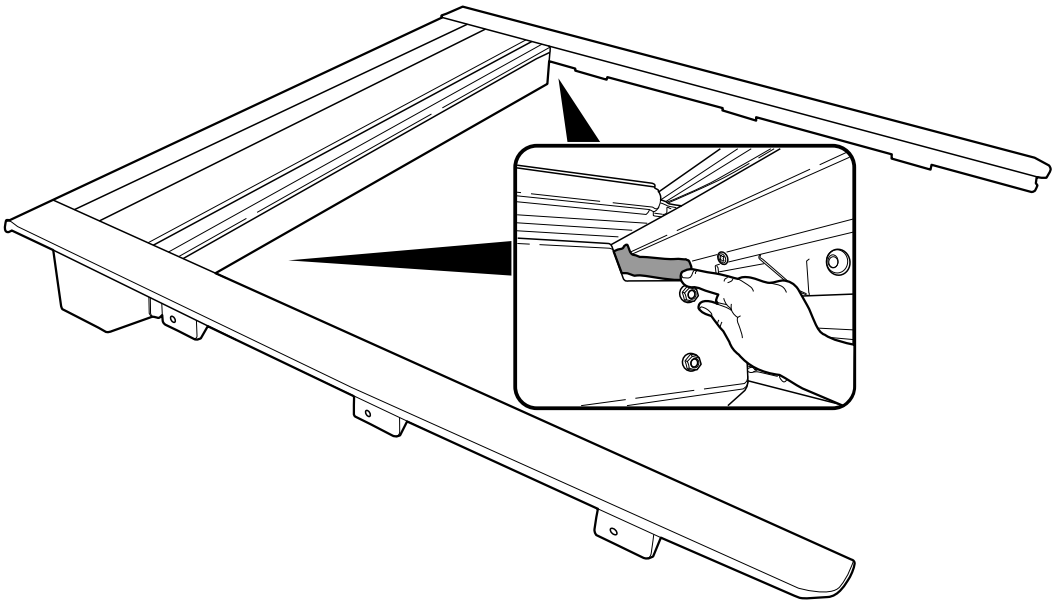

Step 15

Apply tar sealant to both sides of the canister as shown (where accessible).

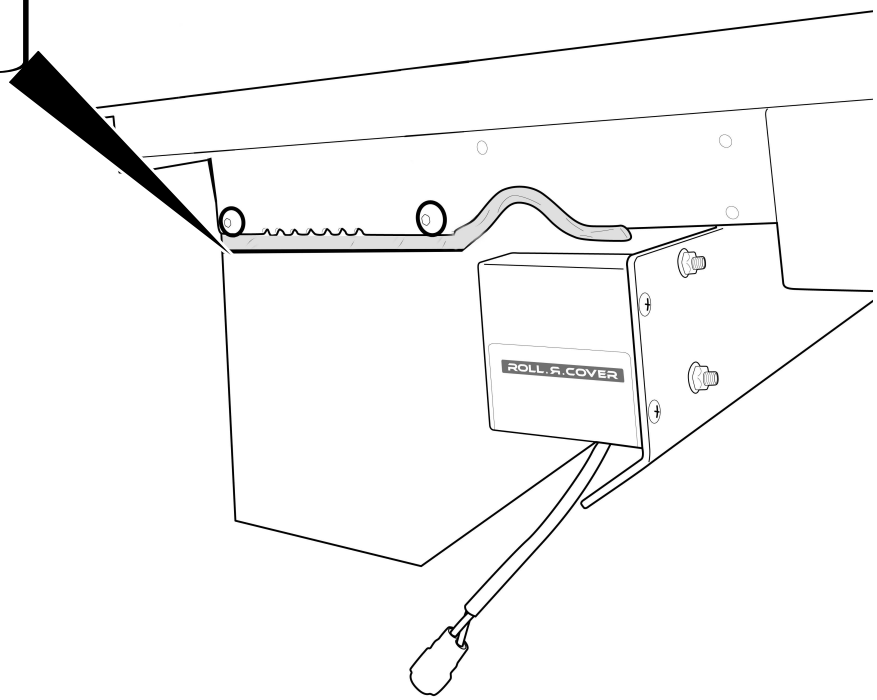

© Roll Я Cover

Step 16

Run foam seal provided along the front of the tub to make headrail level with sides.

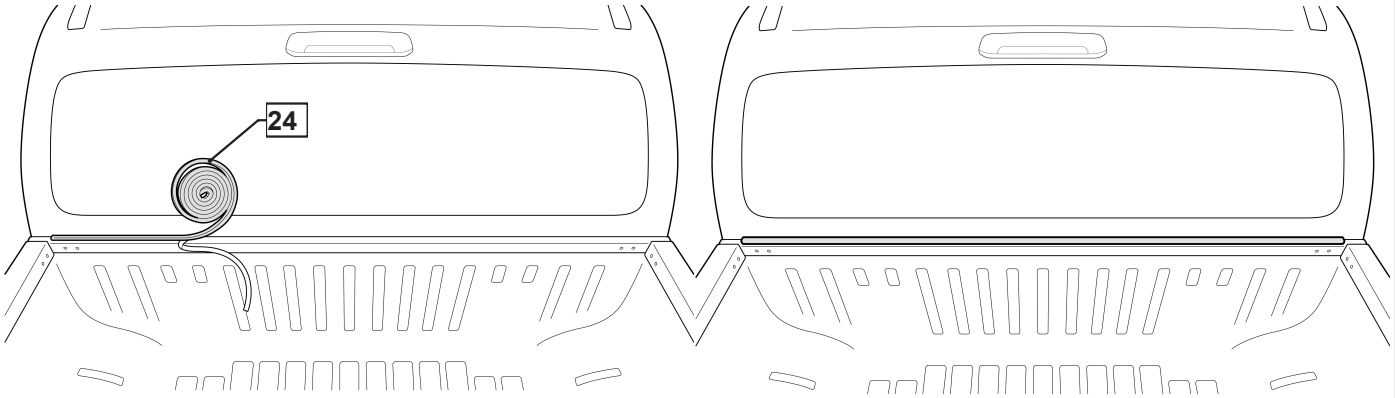

Step 17

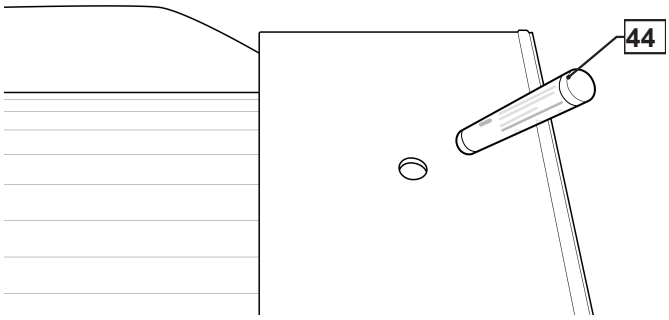

Apply 3M primer provided around side rail holes.

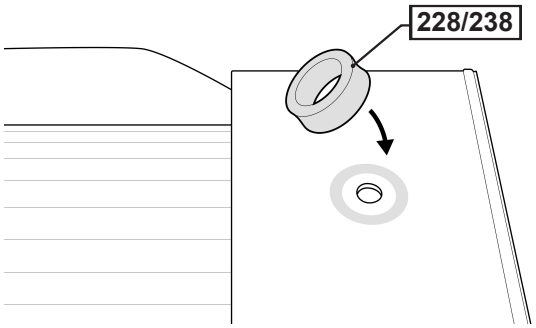

Peal away backing from foam sealant and stick to side rail. Front and rear gaskets are not identical.

© Roll Я Cover

Step 18

Repeat on all holes.

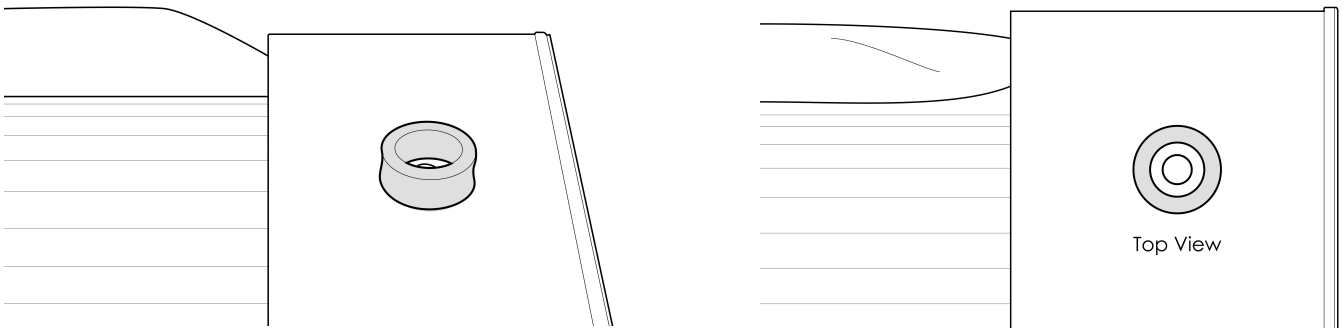

Step 19

Remove all factory brackets from sports bars. Repeat on all four legs.

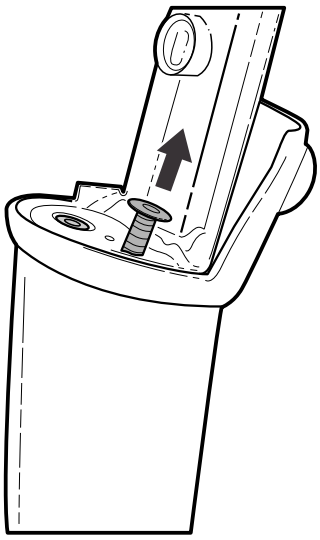

© Roll Я Cover

Step 20

Trim rubber feet cup excess so the base is left flat. Repeat on all four legs.

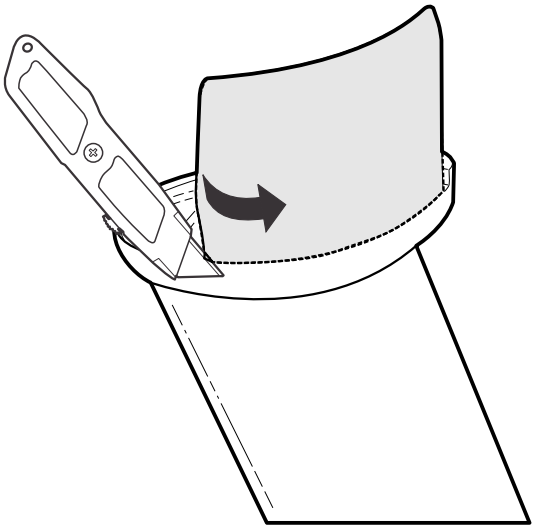

Step 21

Trim as required to allow for Roll R Cover sports bar brackets to be fitted.

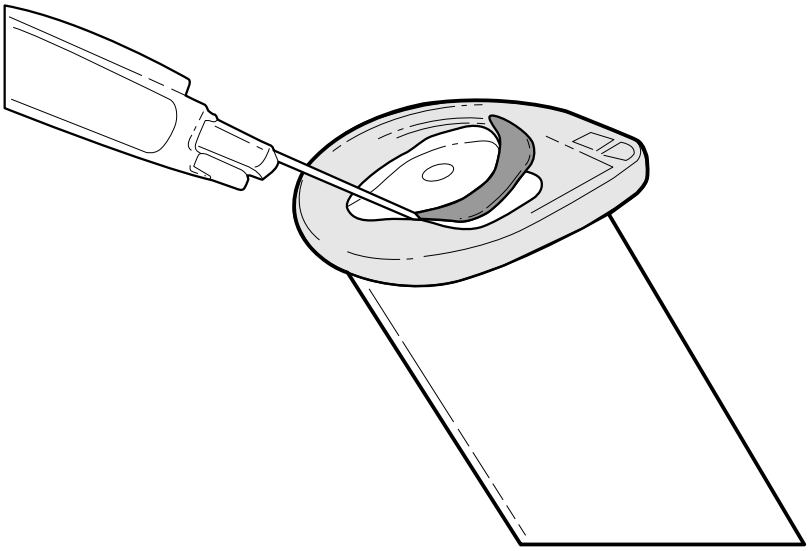

© Roll Я Cover

Step 22

Fit Sports bar brackets using factory bolts

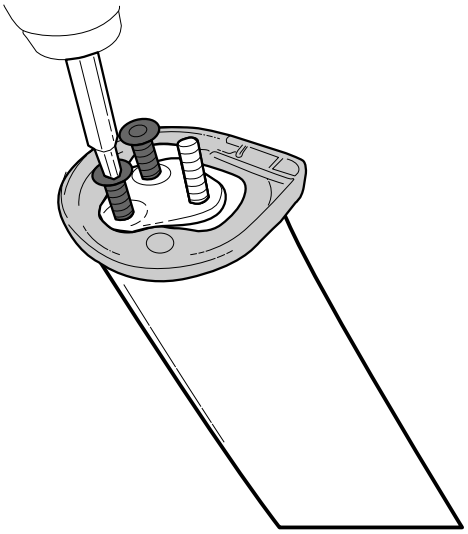

Note - Rear legs, replace factory M8 Bolt with supplied M8 20mm Bolts

Note - Front and rear brackets are not identical.

Step 23

Place Sportsbar on Roll R cover

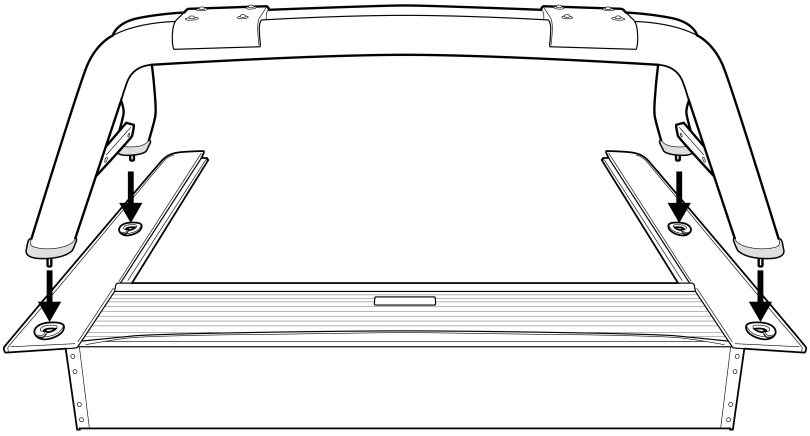

© Roll Я Cover

Step 24

Front leg of the Sportsbar.

Place flat plate through the thread, flat washer and tighten with the nylock nut provided at 6NM

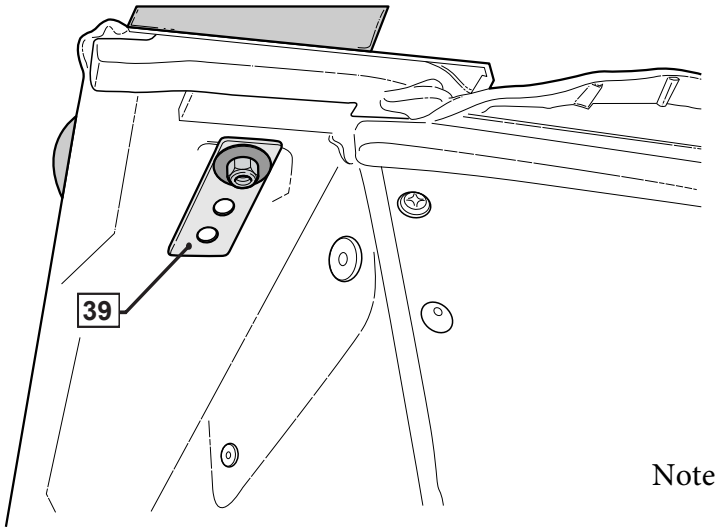

Note - Do not overtighten

Step 25

Rear leg of the Sportsbar

Place flat washer and tighten with the nylock nut provided.

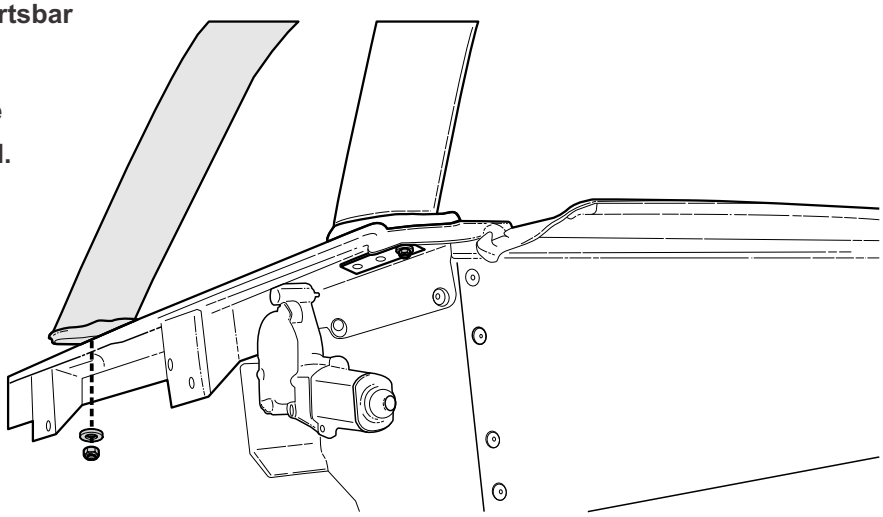

© Roll Я Cover

Step 26

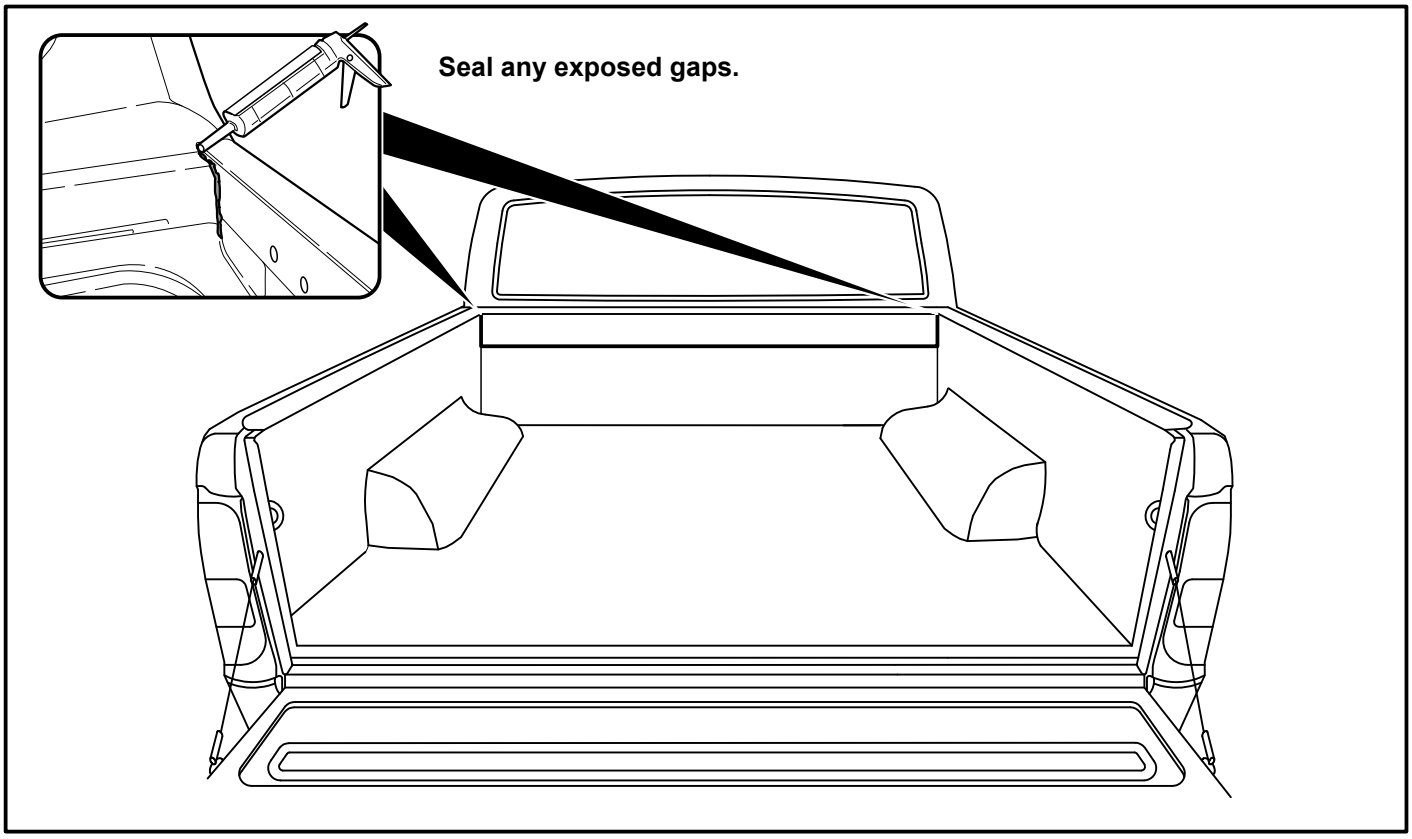

Step 27

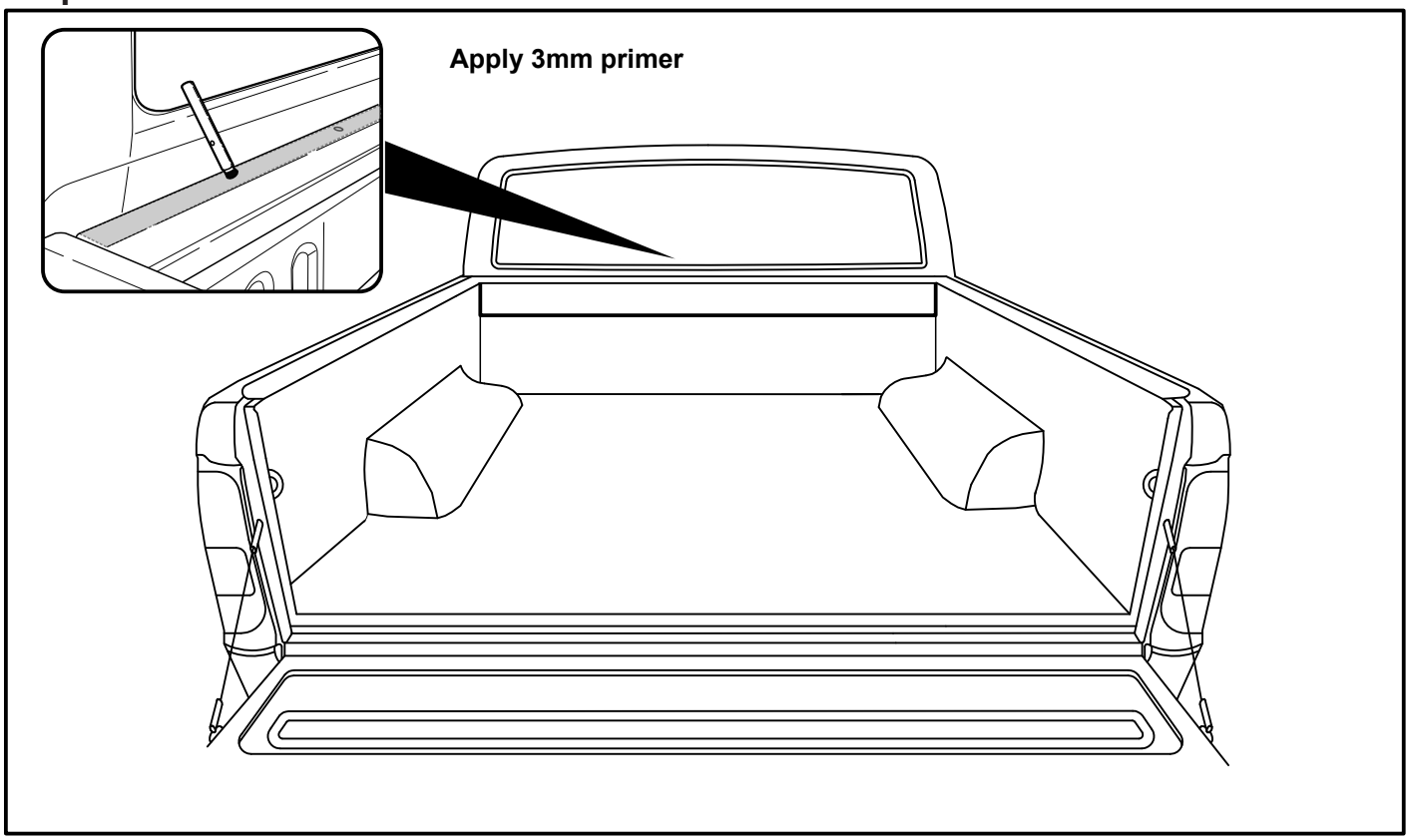

© Roll Я Cover

STEP 28

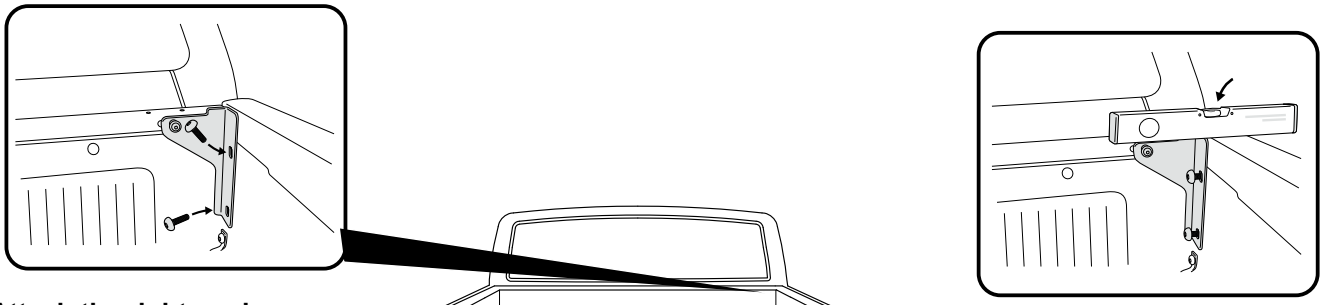

Attach the right angle baracket provided loosley with the reatined factory bolts to the left and right top corners of the tub.

Using a spirit, make sure the top of the bracket is level with the top outside edge of the tub.

Then tighten all bolts to 6nm to avoid the bracket from moving.

Step 29

Installing the Roll-R-Cover

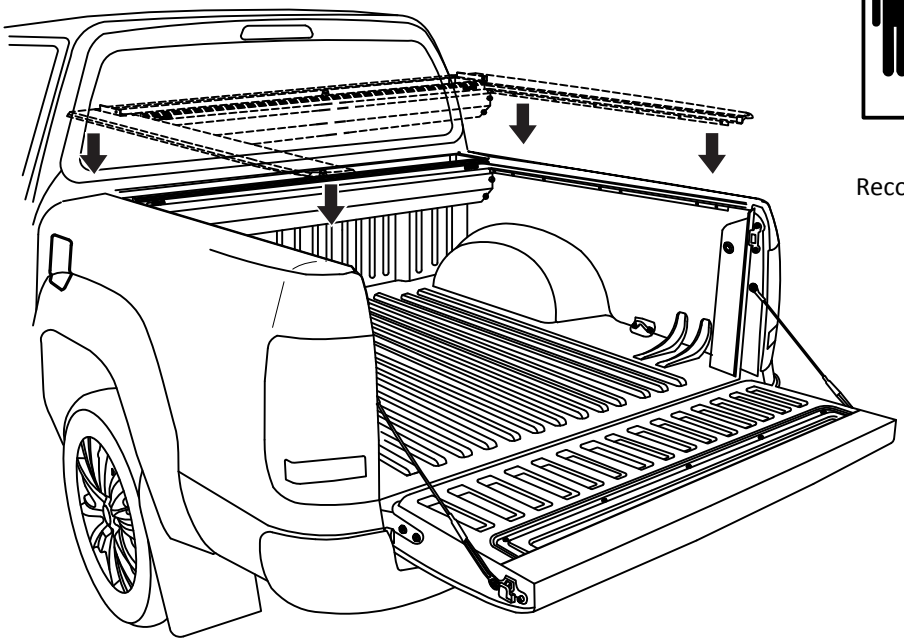

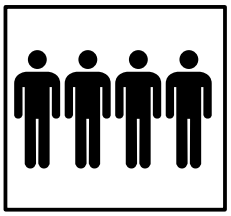

4 People
Recommended for lift

© Roll Я Cover

Step 30

Before dropping the Roll R cover into place on the tub, connect all relevant connections or plugs to the receiver and motor plug connection.

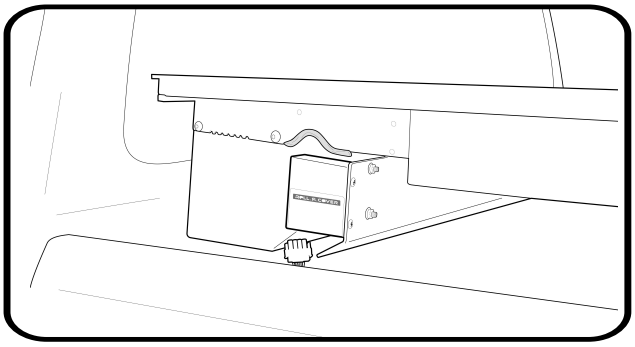

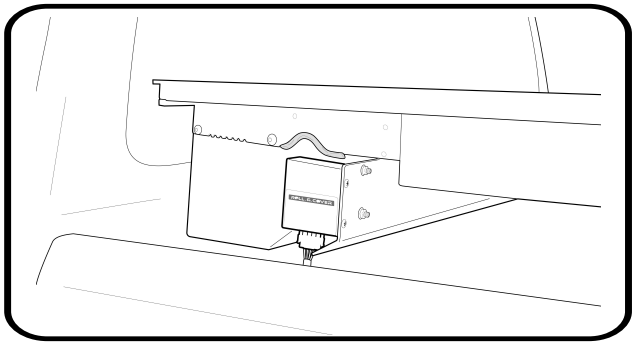

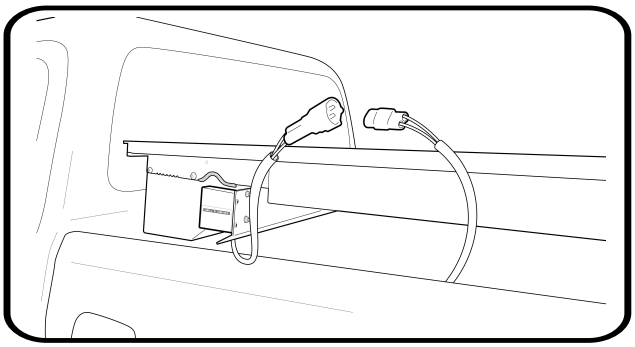

Step 31

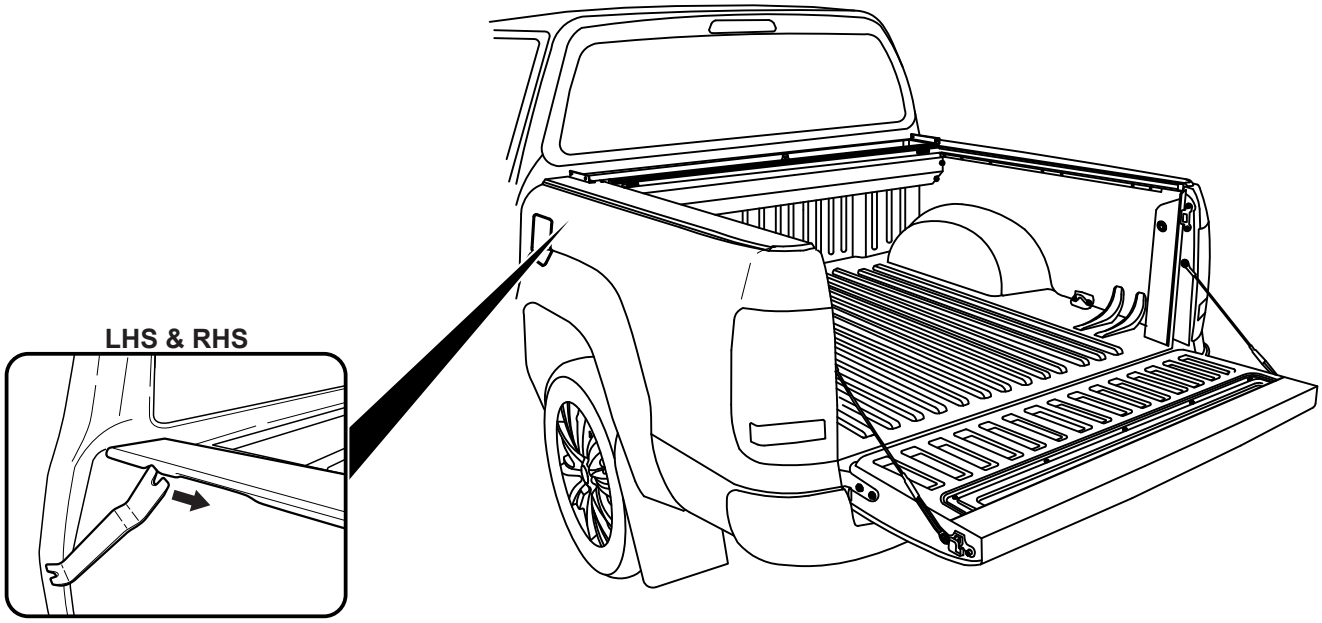

© Roll Я Cover

Step 32

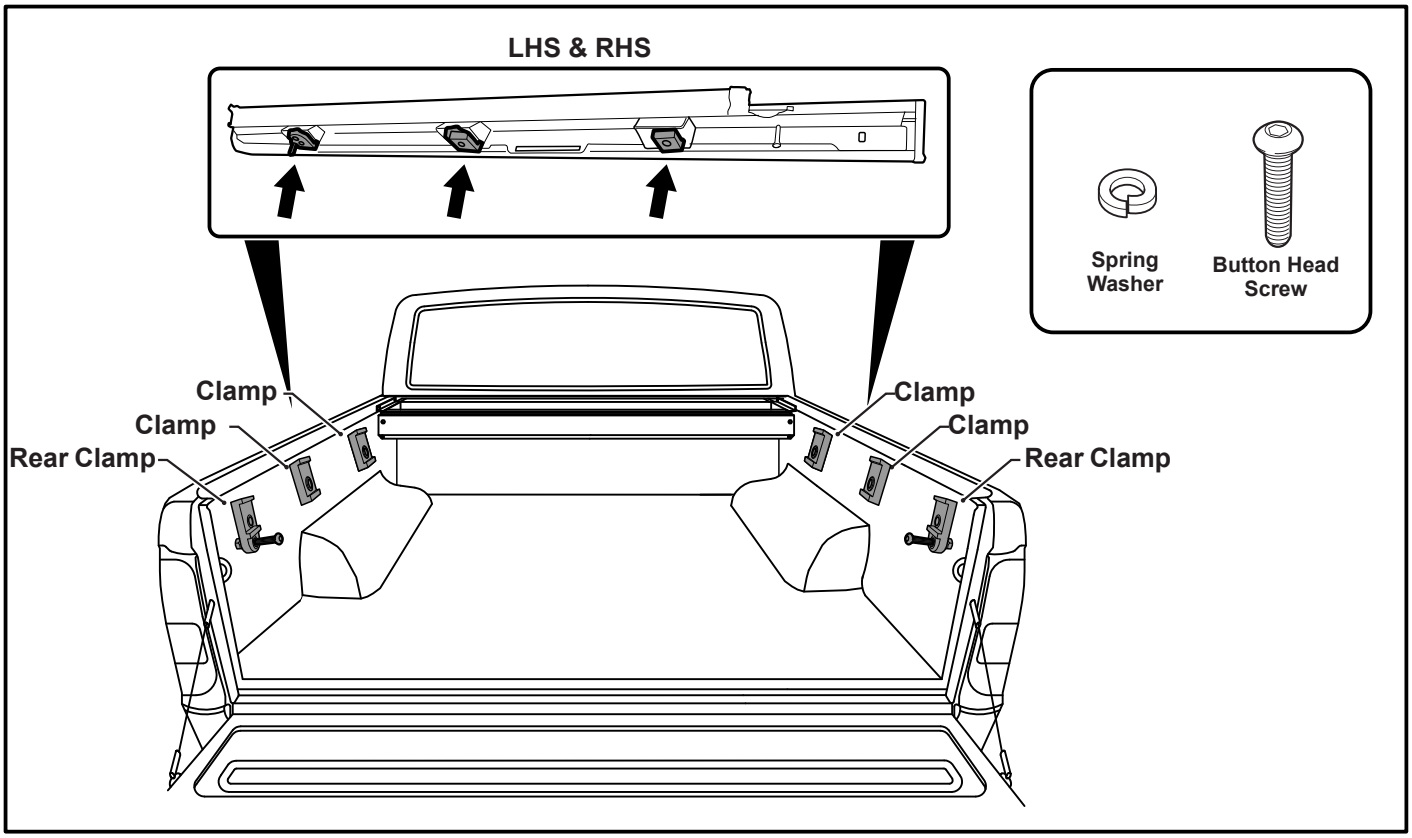

Step 33

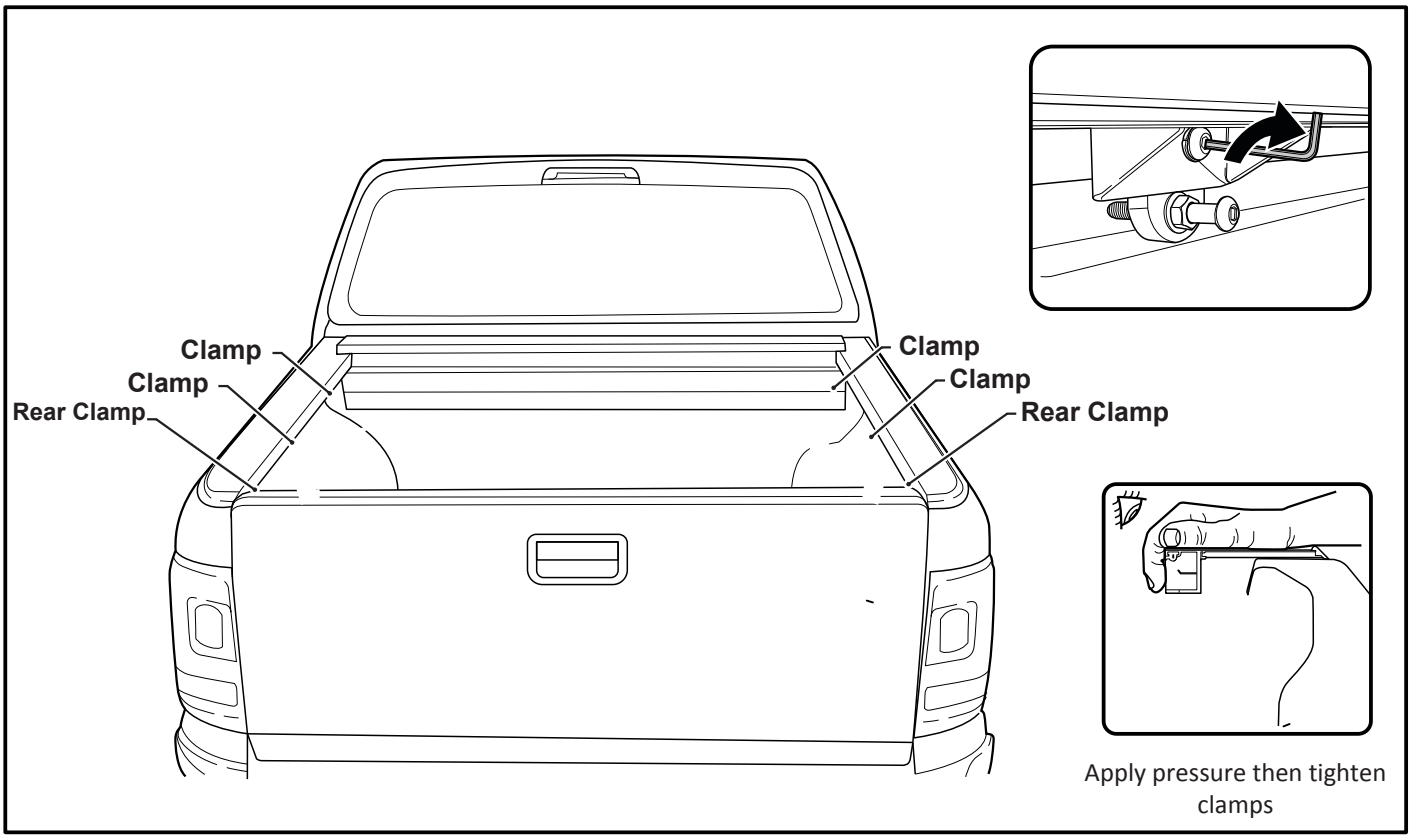

© Roll Я Cover

Step 34

If curtain doesn't meet the tailgate in it's fully closed position, loosen the clamps and shift the unit back.

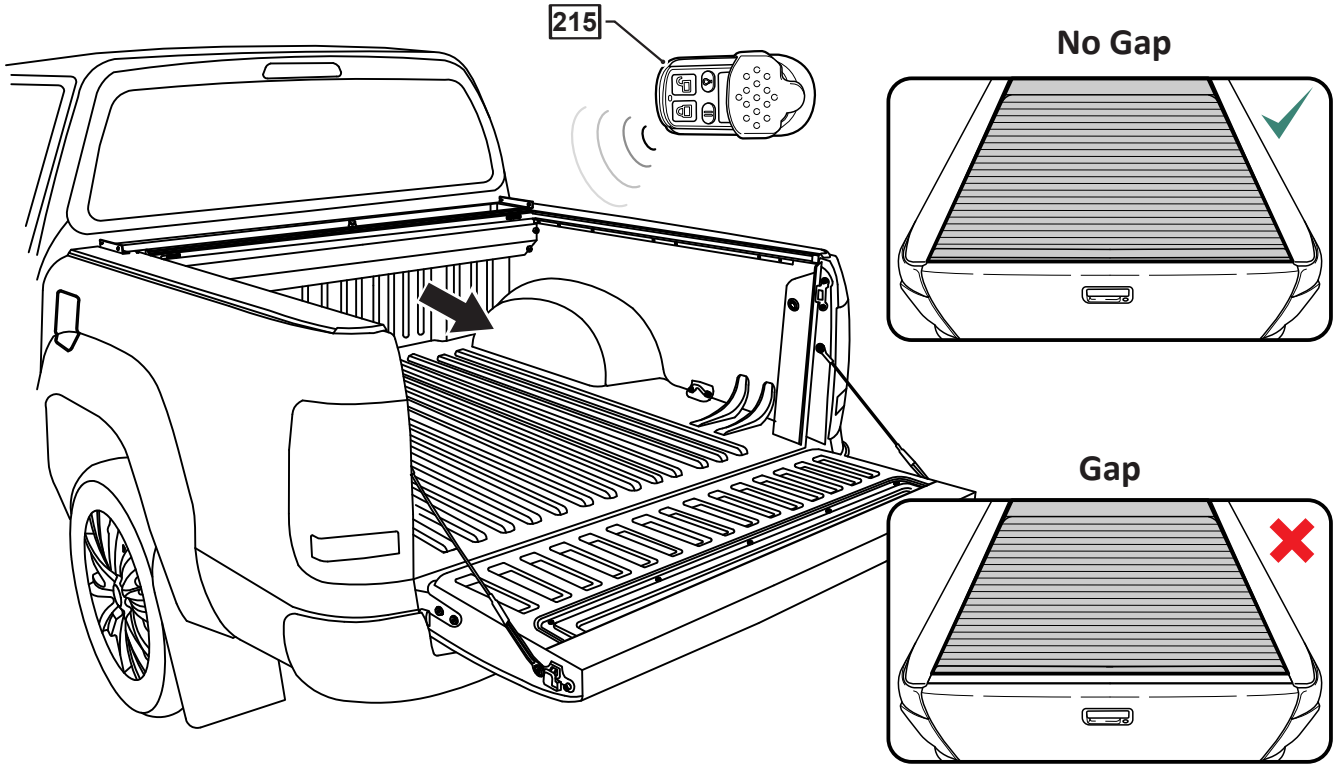

Step 35

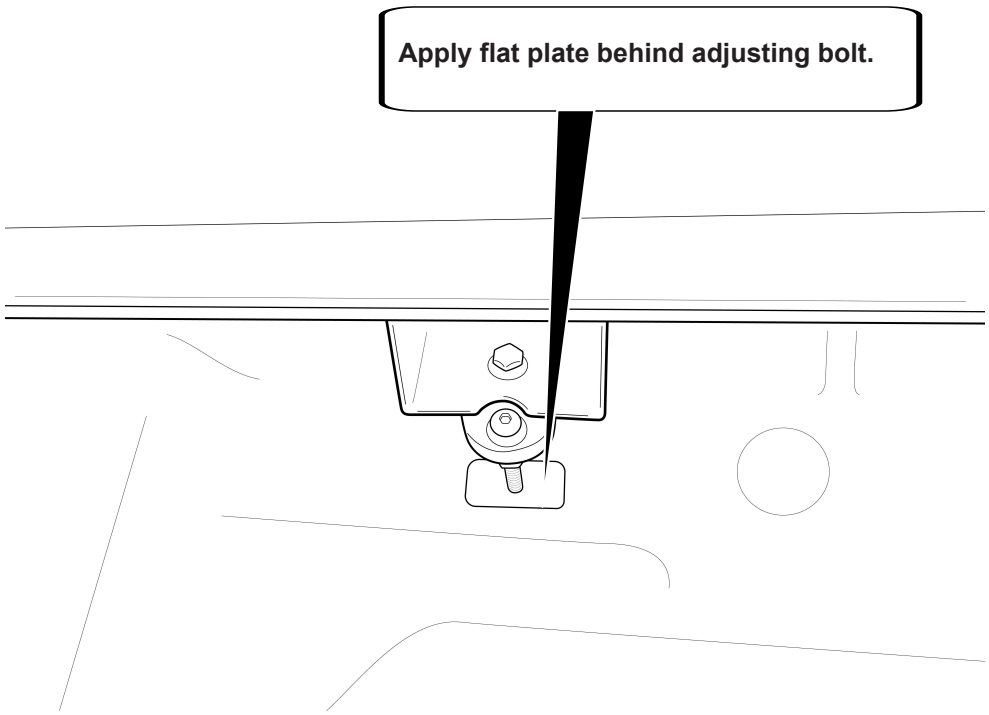

© Roll Я Cover

Step 36

Side rail rubber must have a 2mm gap from the top of the tailgate in the closed position.

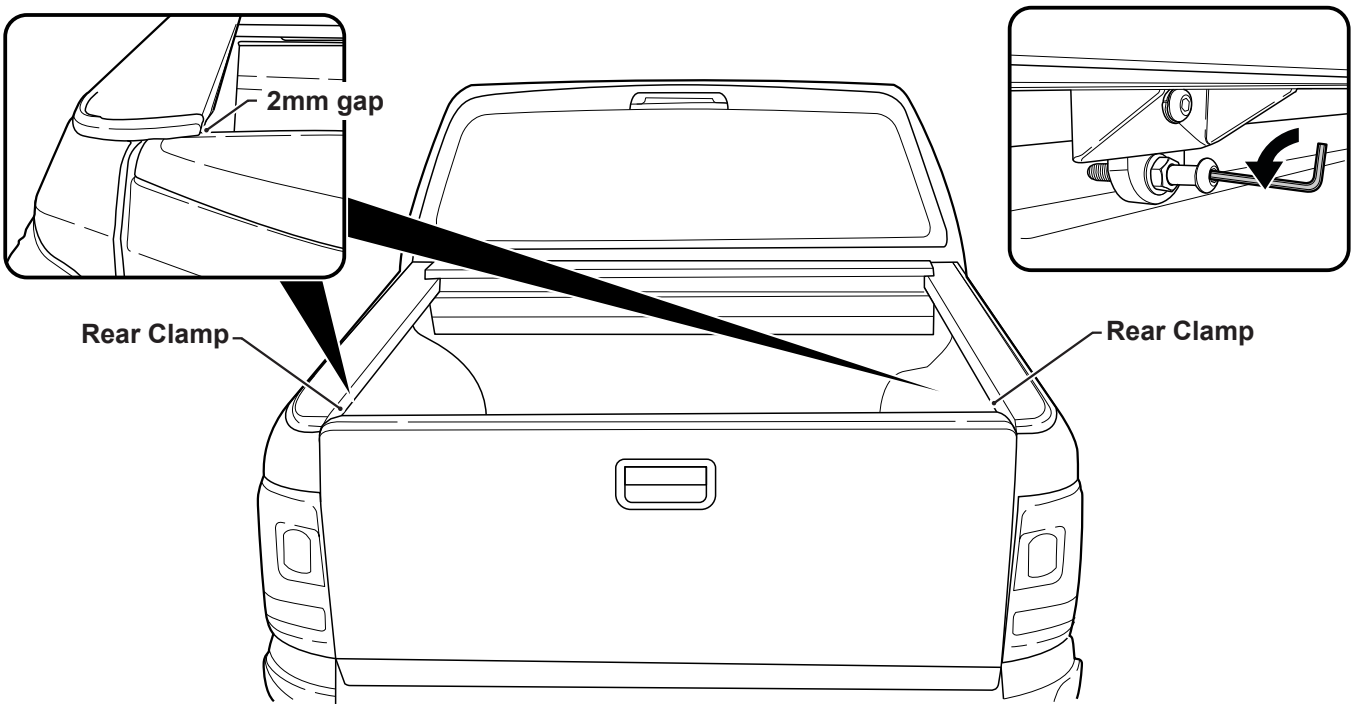

Rear clamp has an adjustment bolt. Drive the bolt in to lift the rear of the side rail till it clears the tailgate.

Step 37

Peal double sided tape backing off and stick to vehicle.

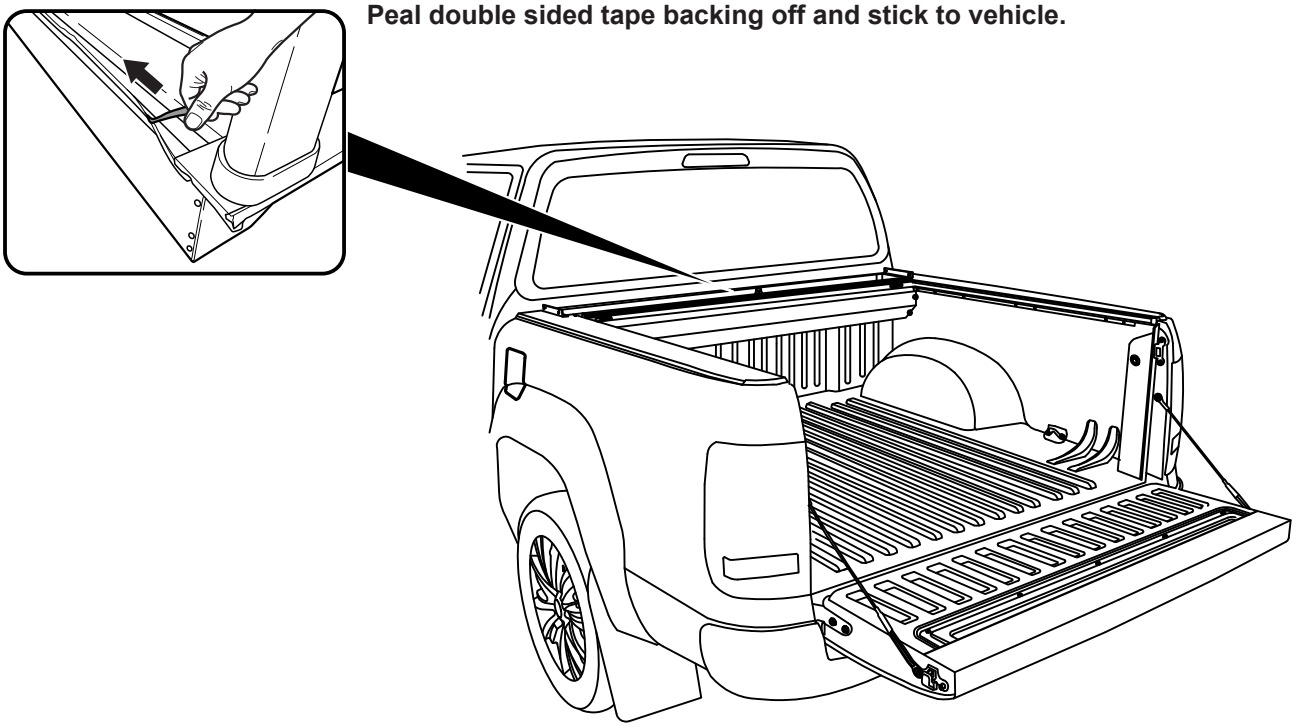

© Roll Я Cover

Step 38

Drill through bed and liner (check for obstructions).

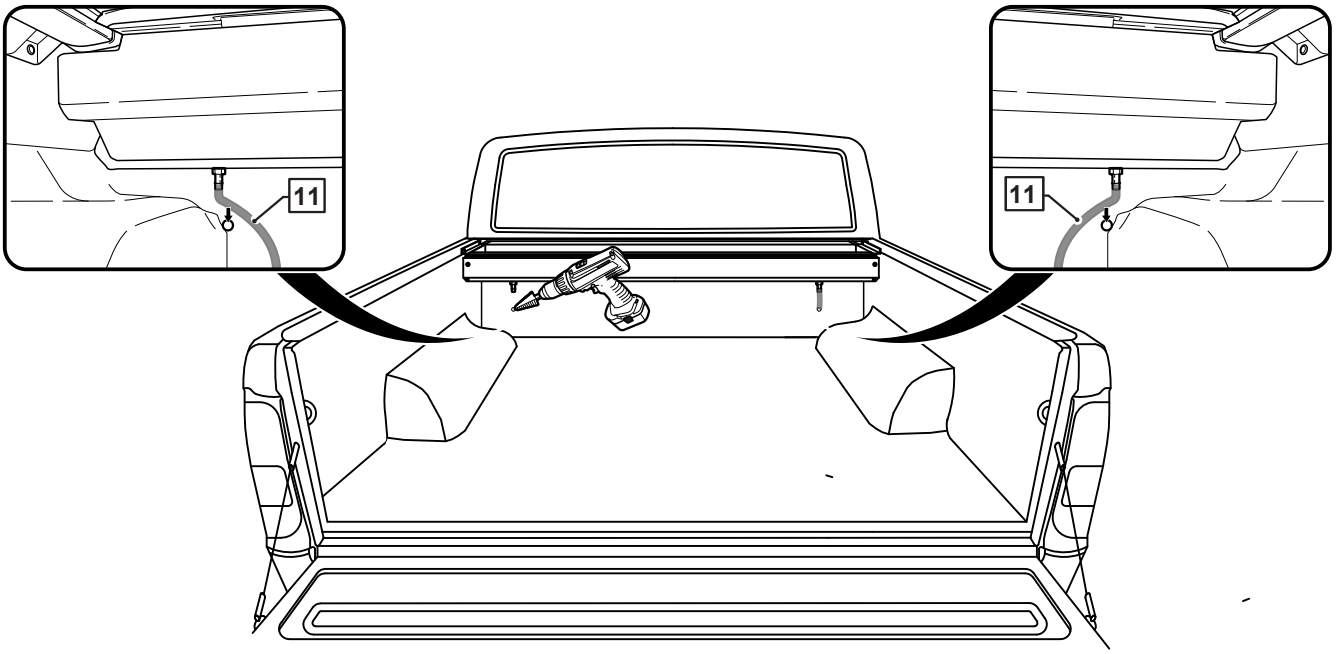

Step 39

Remove the tail light to check for obstructions before drilling

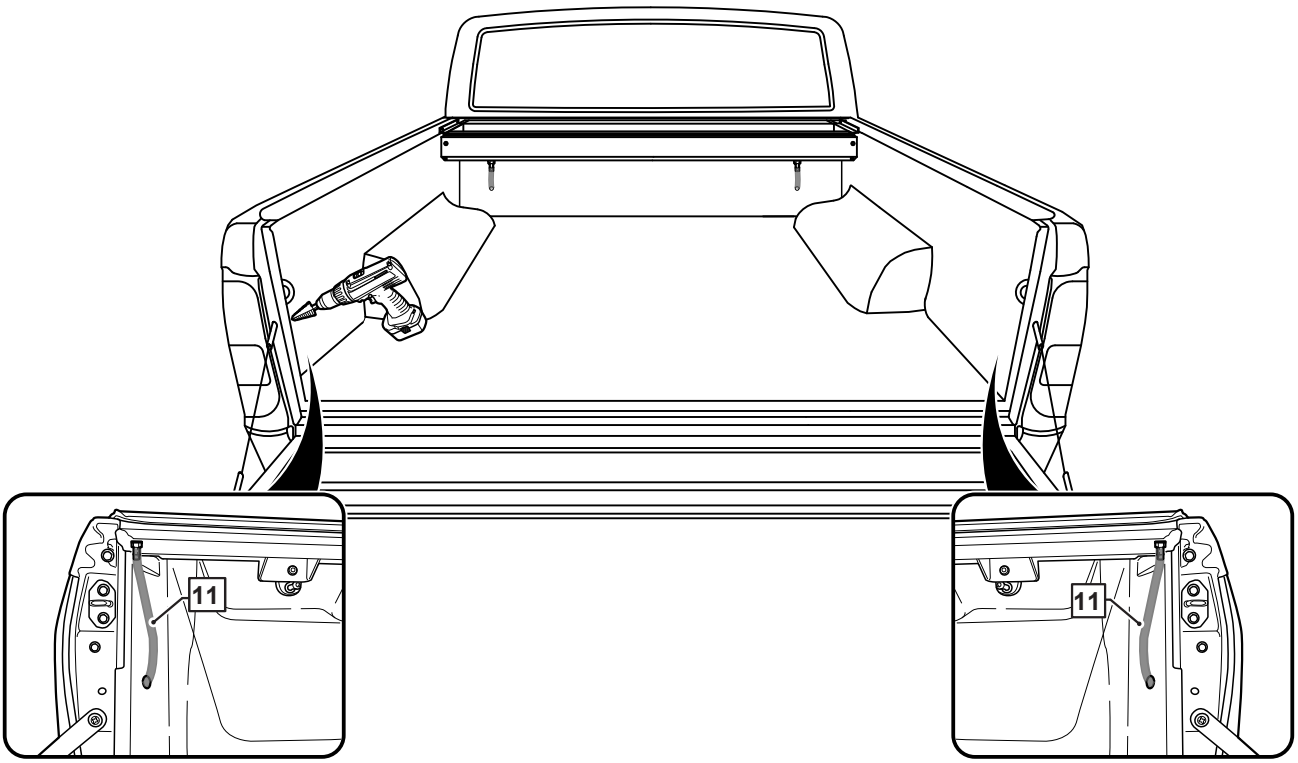

© Roll Я Cover

Step 40

Snap fit the top cover.

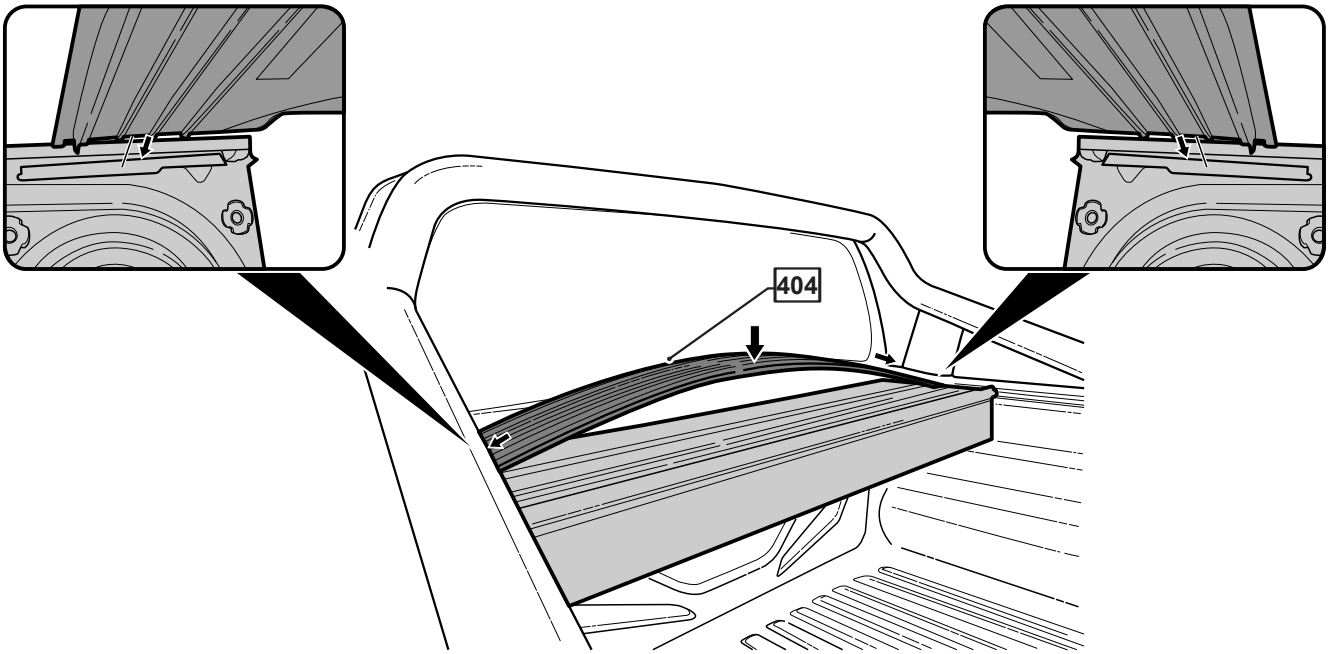

Step 41

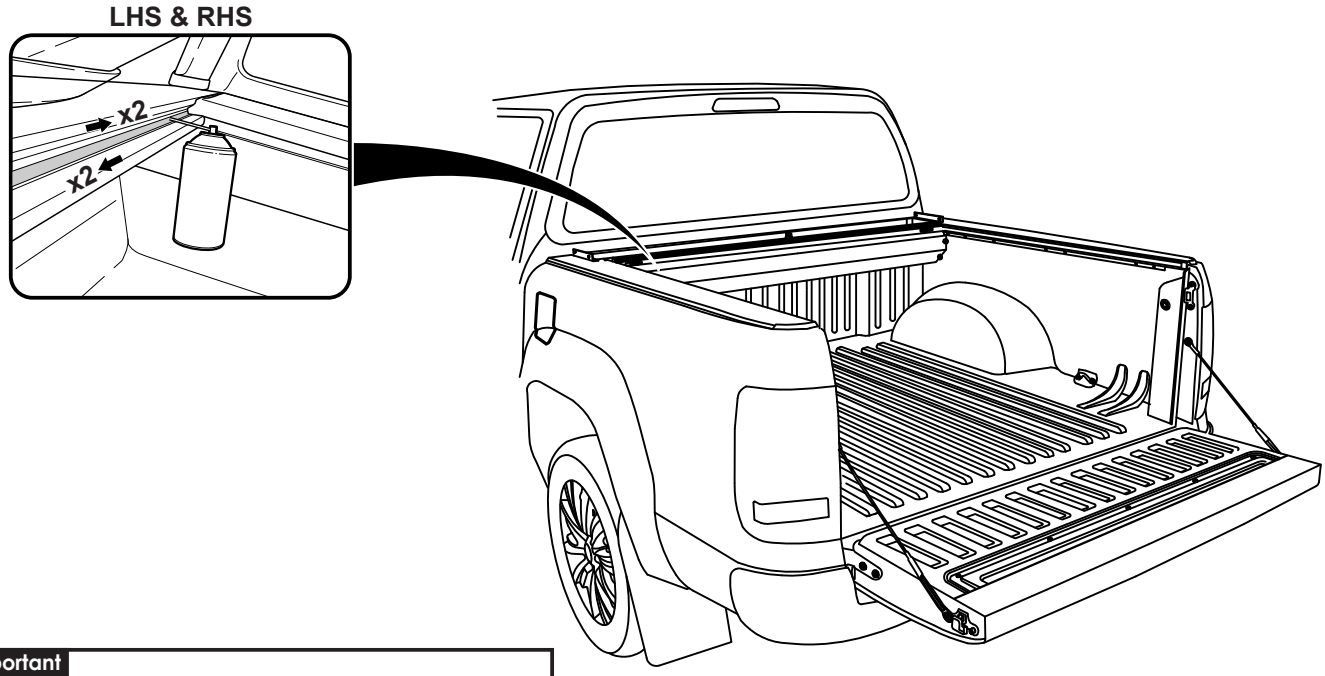

Important

Tracks need to be lubricated regularly

© Roll Я Cover

Step 42

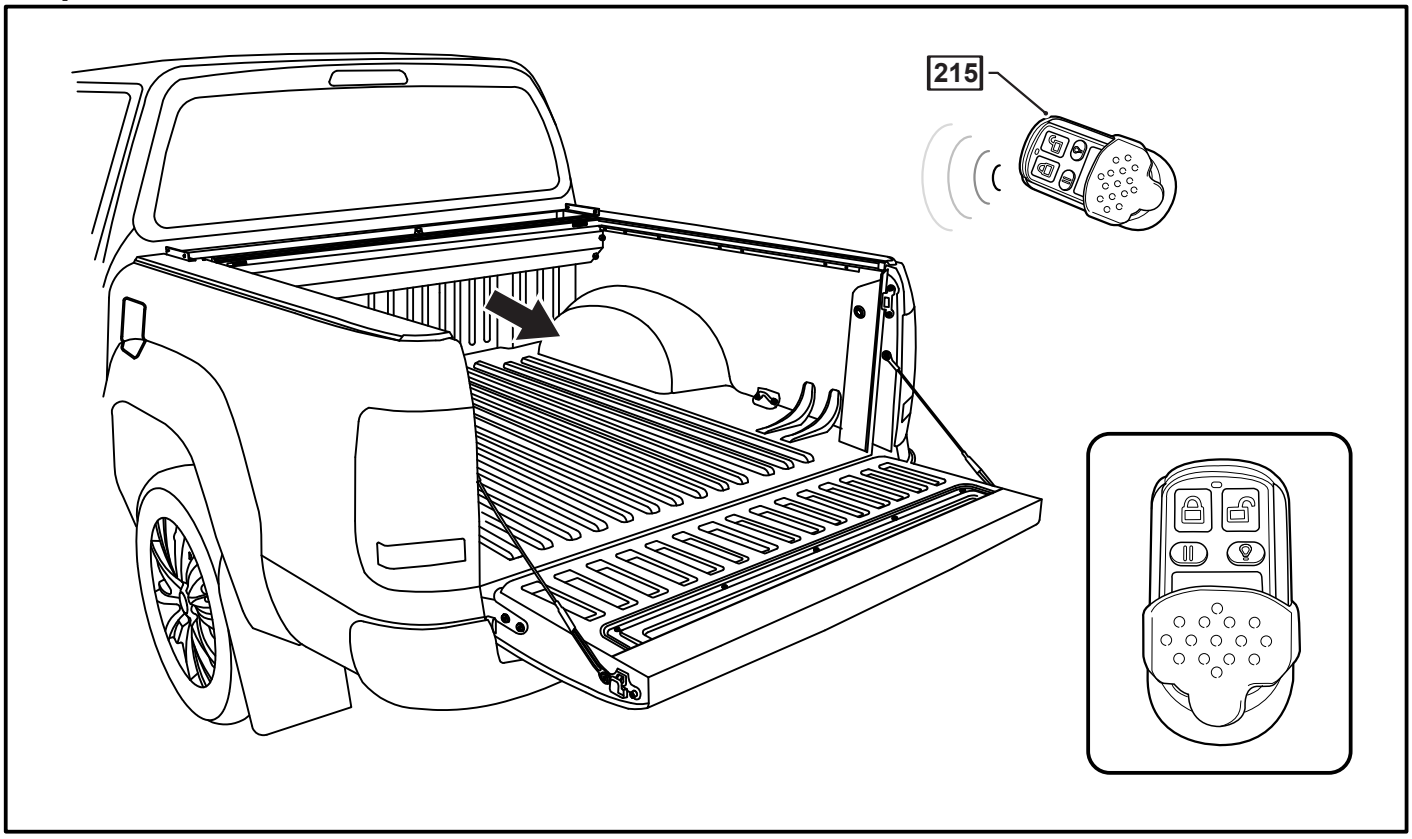

Step 43

Important

You may open tailgate when Roll R Cover is in closed position, however you MUST NOT close the tailgate when Roll R Cover curtain is in the fully closed position.

E. & O.E. This document is copyright and must not be used except as permitted below or under the Copyright Act 1968. You may reproduce and publish this document in whole or in part for your or your organisation's own personal or internal compliance, educational or non-commercial purposes. You must not alter or amend this document in any way. You must not reproduce or publish this document for commercial gain without the prior written consent of the copyright owner.

© Roll Я Cover