WWW.HSPUTELIDS.COM

Part No: NN42R

Fitting Time: 180 minutes

ROLL.R.COVER

To suit Nissan NP300 Navara Face Lift Dual Cab MY21.5 with sports bars

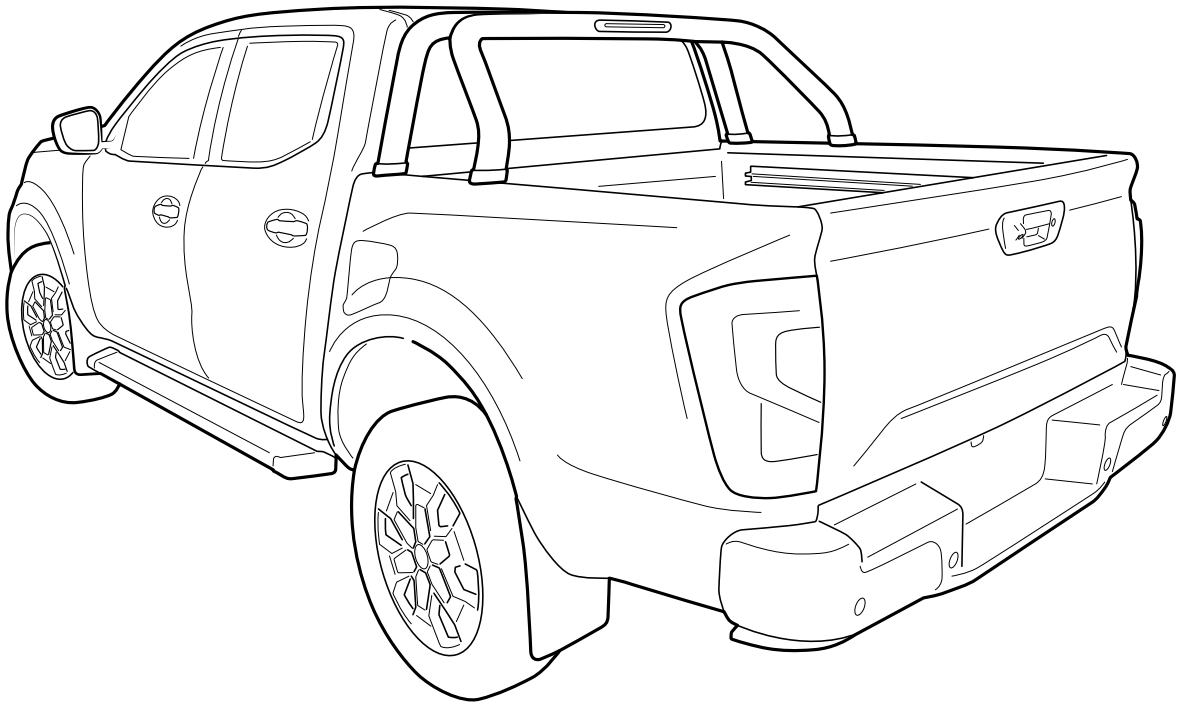

Roll-R-Cover

Fitting Instructions

© Roll Я Cover

General Notes

- Read through the fitting instructions before installation of accessory.
- Always install the Roll Я Cover Wiring Kit following the workshop manual and fitting instructions provided. Failure to do so may cause damage to the vehicle or the accessory.
- Ensure all recyclable components and packaging are discarded and recycled following local recycling regulations.
- It is always recommended that the Roll Я Cover Wiring Kit is fitted by a qualified automotive technician.
- Safely store and protect any removed vehicle components.

Safety Notes

- Check that all work practices comply with safety standards.
- Please wear appropriate clothing and use safety equipment.

Fitting Time

180 minutes

Parts Supplied

NN42R	DUAL CAB NISSAN - ROLL R COVER WITH SPORTS BAR MOUNTING KIT		
PART DISCRIPTION	**PART NUMBER**	**QUANTITY**	**CHECK**
NN42R FITTING INSTRUCTONS	709	1	
REMOTE	215	2	
NN42R CANISTER AND CURTAIN	274	1	
NN42R RAIL RIGHTHAND	710	1	
NN42R RAIL LEFTHAND	711	1	
COMPLETE CANISTER COVER	402	1	
CABLE TIE	501	1	
CABLE TIE 4.8X300	217	10	
HOSE 600MM	11	4	
ROLL R LOOM	216	1	
LUBRICANT SPRAY	47	1	
OPERATION LEAFLET	66	1	
MAINTENANCE LEAFLET	67	1	
M8 X 20MM BOLT	714	6	
M10 WASHER	715	8	
M10 LOCK NUTS	716	4	
NN42R GASKET(L SHAPE)	234	2	
NN42R GASKET (ROUND)	227	2	
ADJUSTMENT PLATES	31	2	
NN42 SPACER FRONT	704	2	
NN42 REAR SPACER	705	2	
NN42 BAR ASSEMBLY	713	1	
PRIMER STICK	44	1	
BLACK PUTTY	3	8	

© Roll Я Cover

The following steps are for vehicles fitted with OEM Sportsbar only.

Step 1

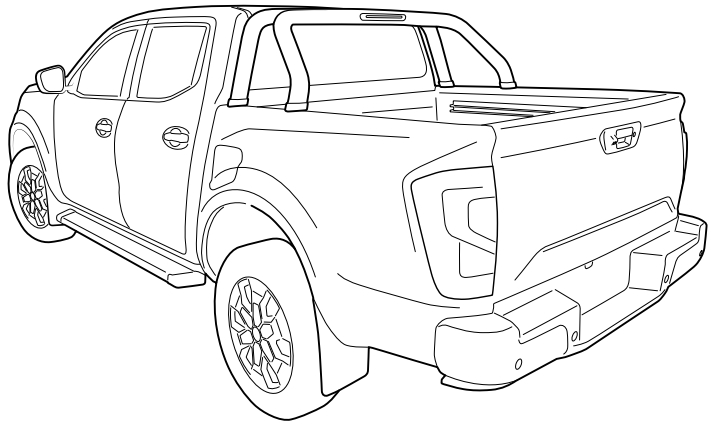

Remove sports bars of tub brackets.

Step 2

Remove & discard all sports bar tub brackets.

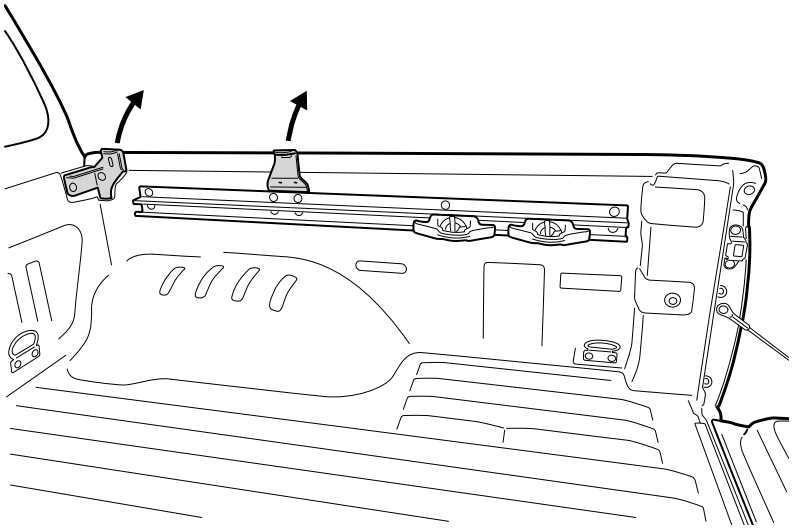

Step 3

Slide all tie downs towards rear of tub.

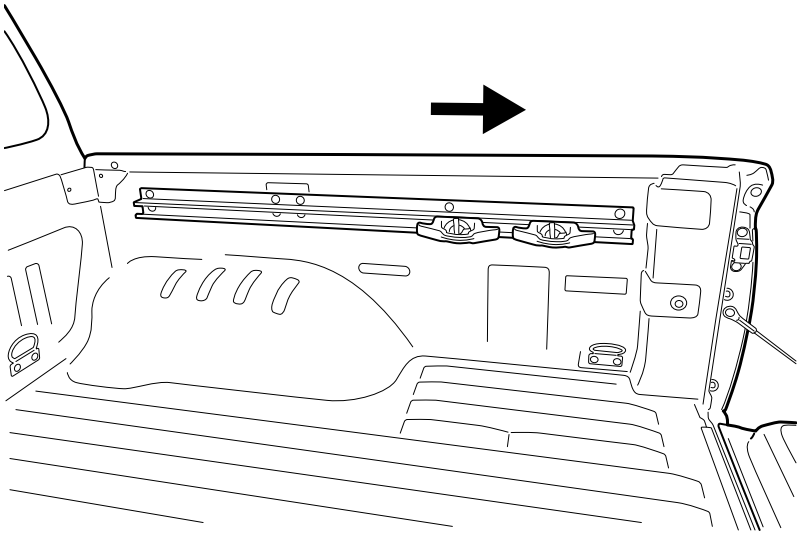

© Roll Я Cover

Step 4

1. Unfasten and retain 4 factory bolts as indicated.
2. Remove factory grommet left and right grommet and discard.

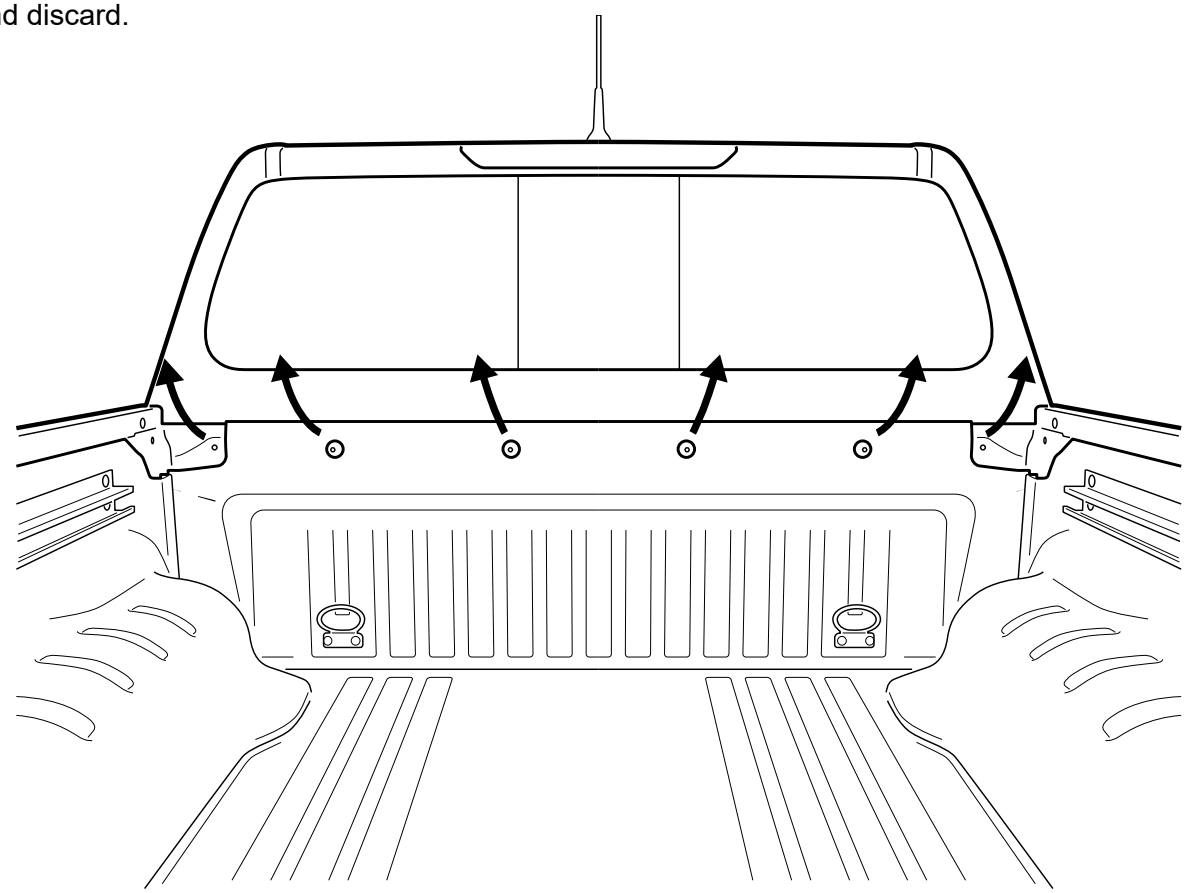

Step 5

Clean indicated area's of the tub.

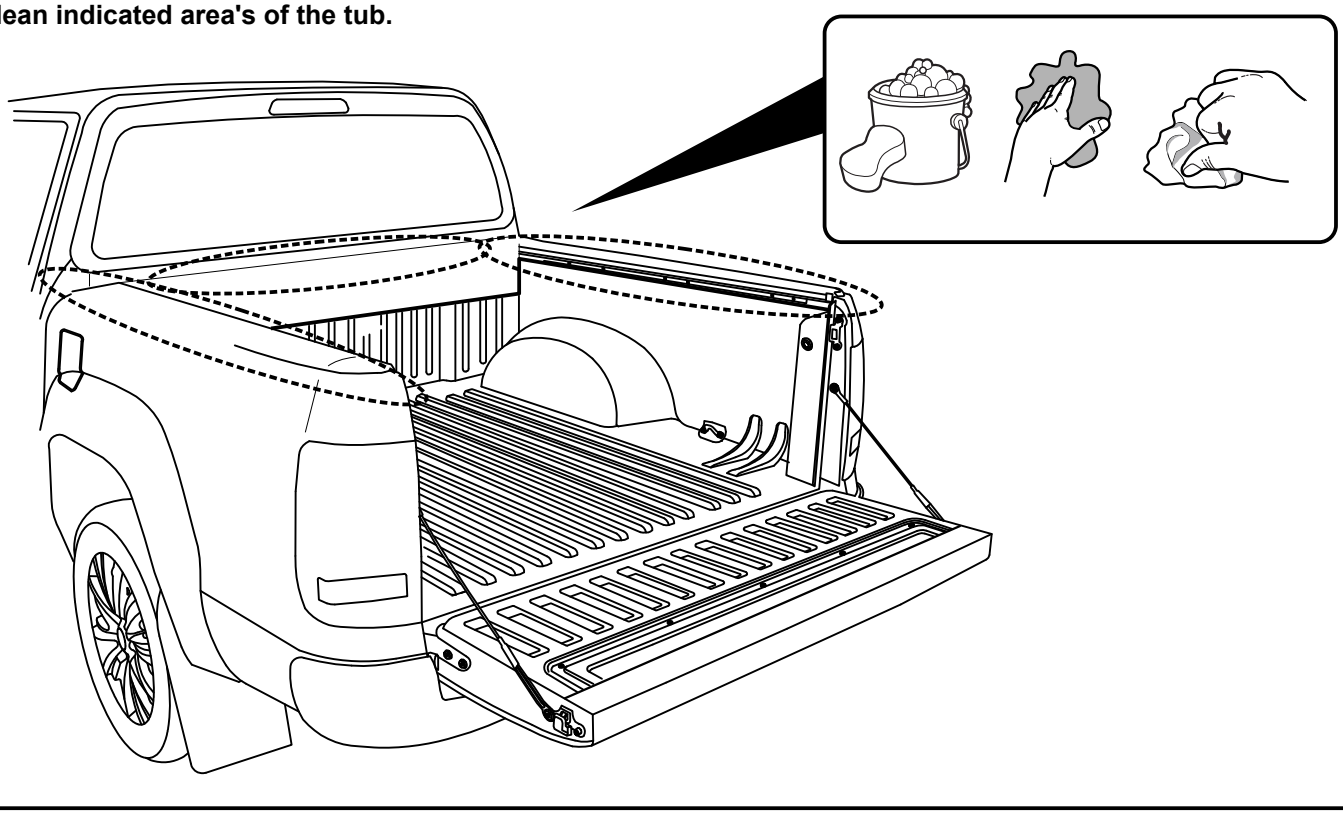

© Roll Я Cover

Step 6

Carefully unpack the box.

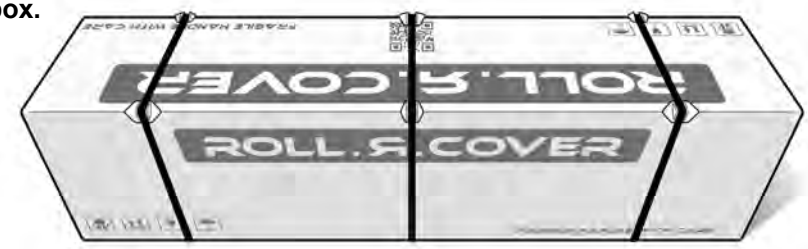

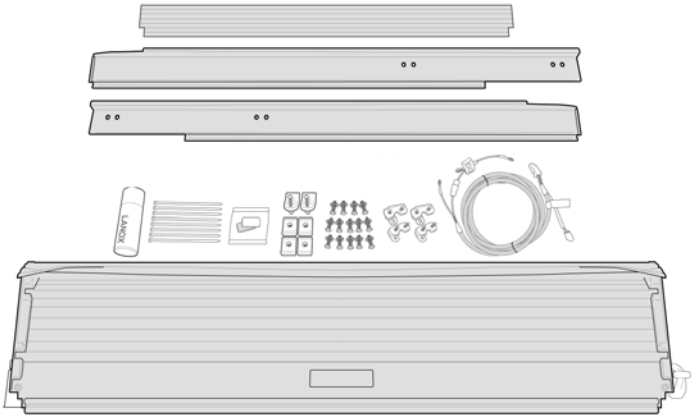

Step 7

Place Front bar assembly to head board and line up with factory threads. Note: If tub is fitted with factory liner, place Front bar assembly between head board and liner. Fasten using factory bolts where possible. M8 bolts are provided in the kit where needed.

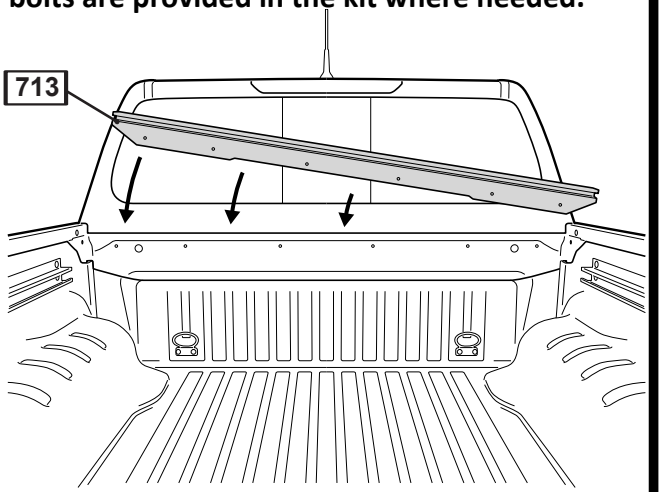

Fasten in to position using the 6 qty. M8 x 20mam bolt.

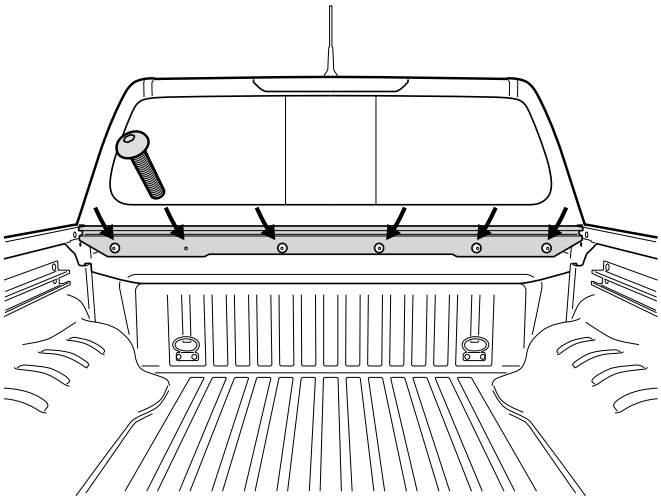

© Roll Я Cover

Step 8

Wiring Harness steps

1 **Feed through the cavity**

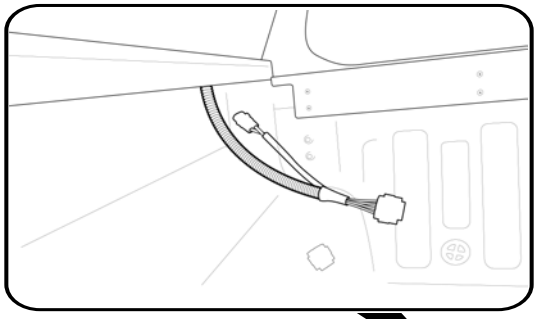

3

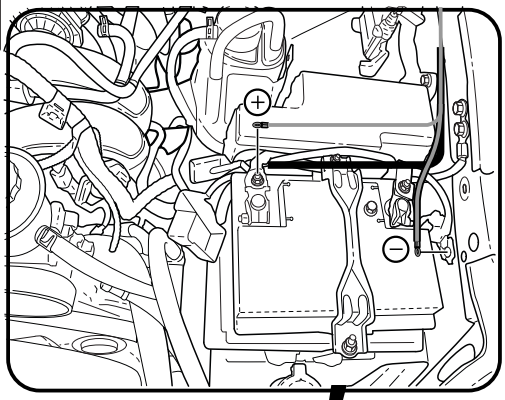

2

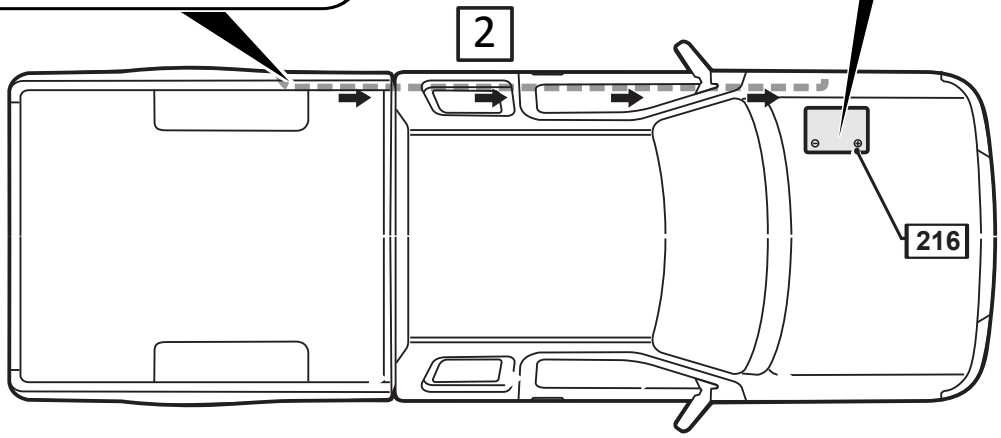

Run the wiring from the front corner cavity to the battery over the chassis rail. Making sure to keep away from hot obstructions and cable tie every 400mm.

Step 9

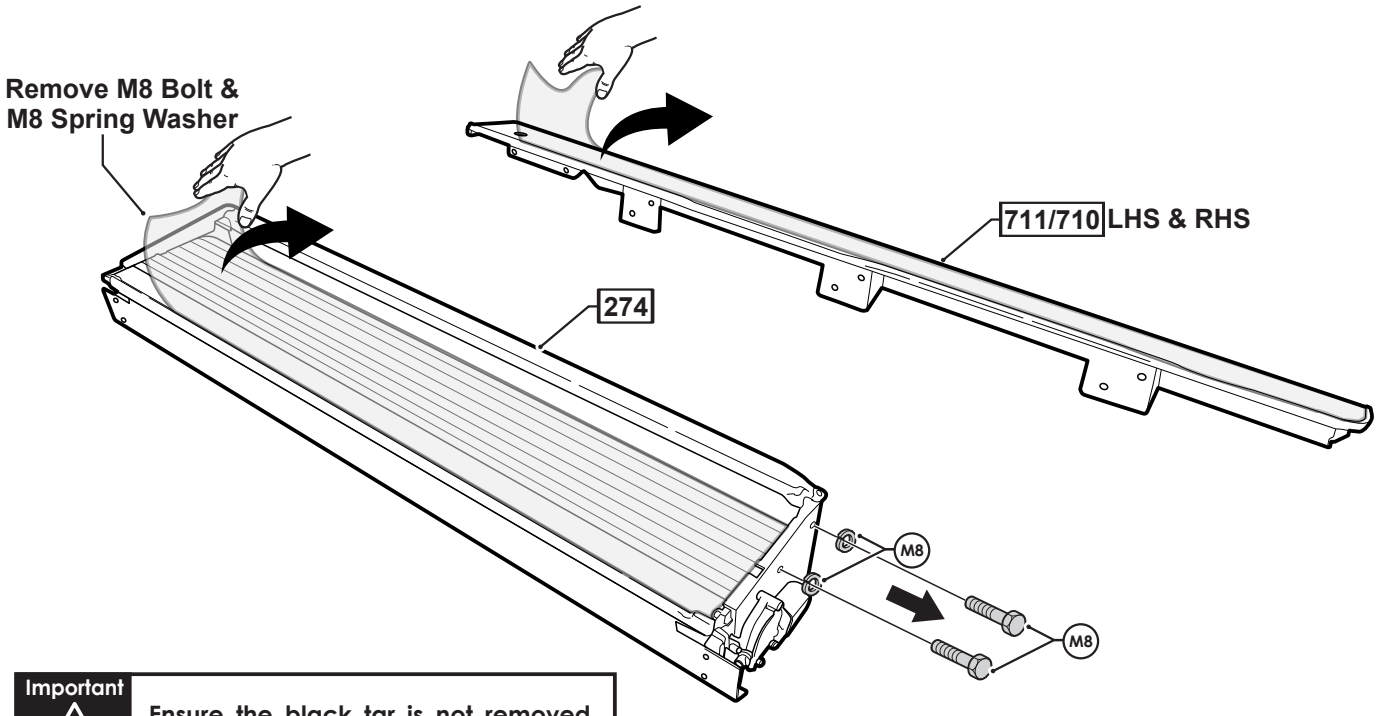

Important

Ensure the black tar is not removed with the film.

© Roll Я Cover

Step 10

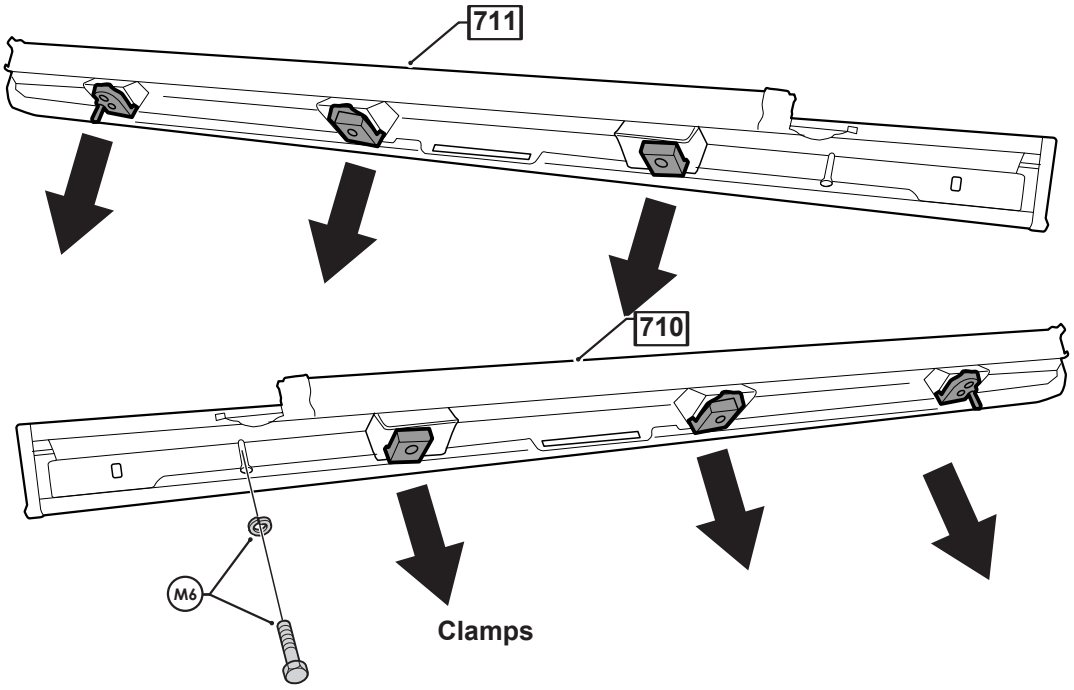

M6 Bolt and M6 Spring Washer is only on the RHS Side Rail

Step 11

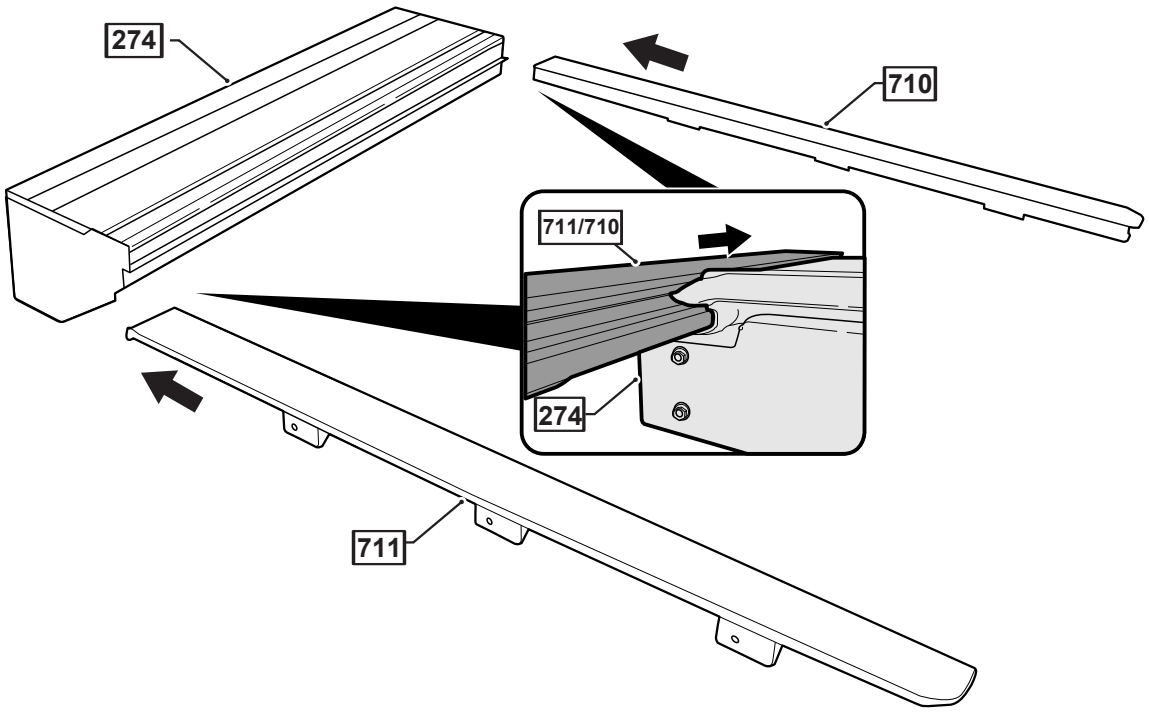

© Roll Я Cover

– Step 12

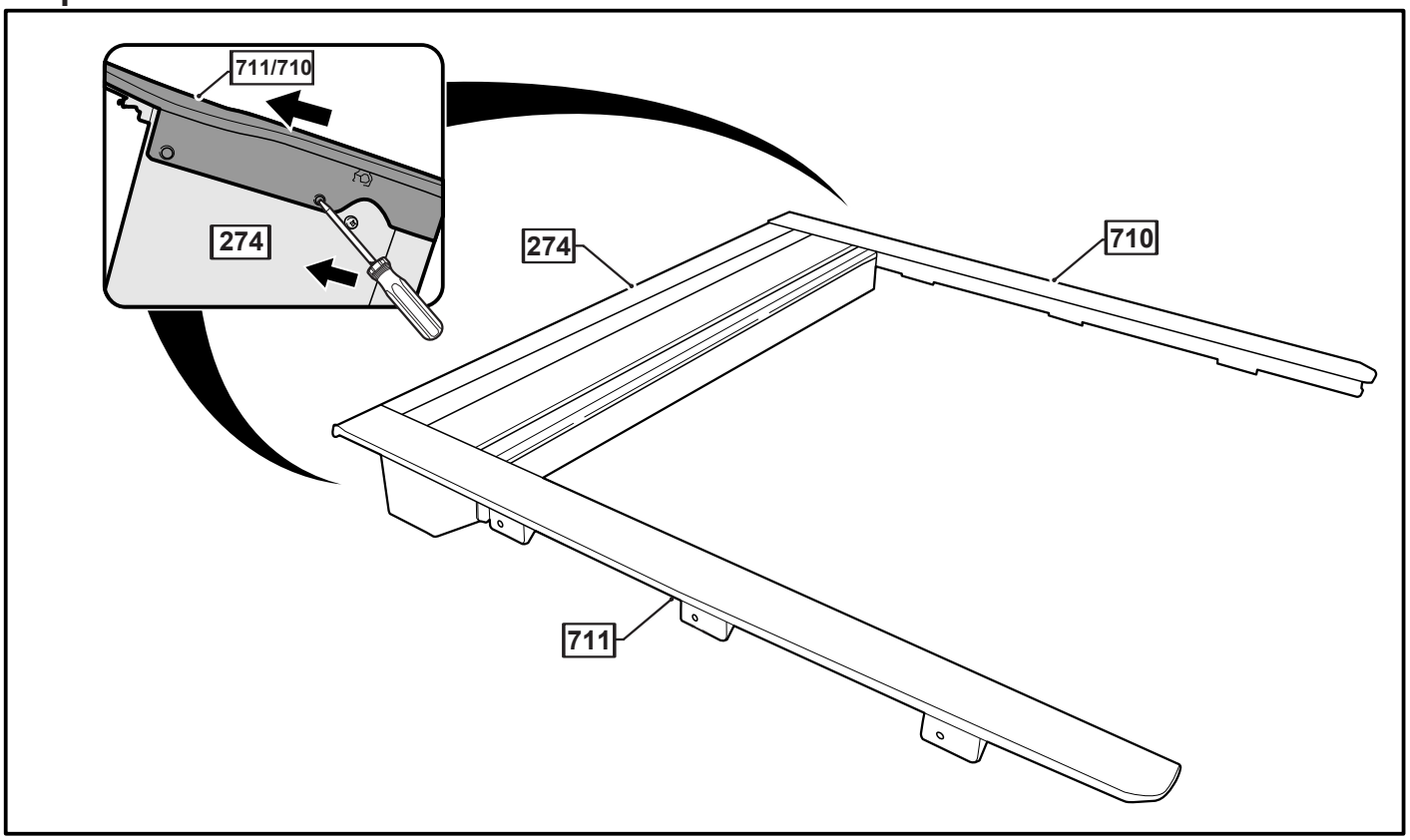

– Step 13

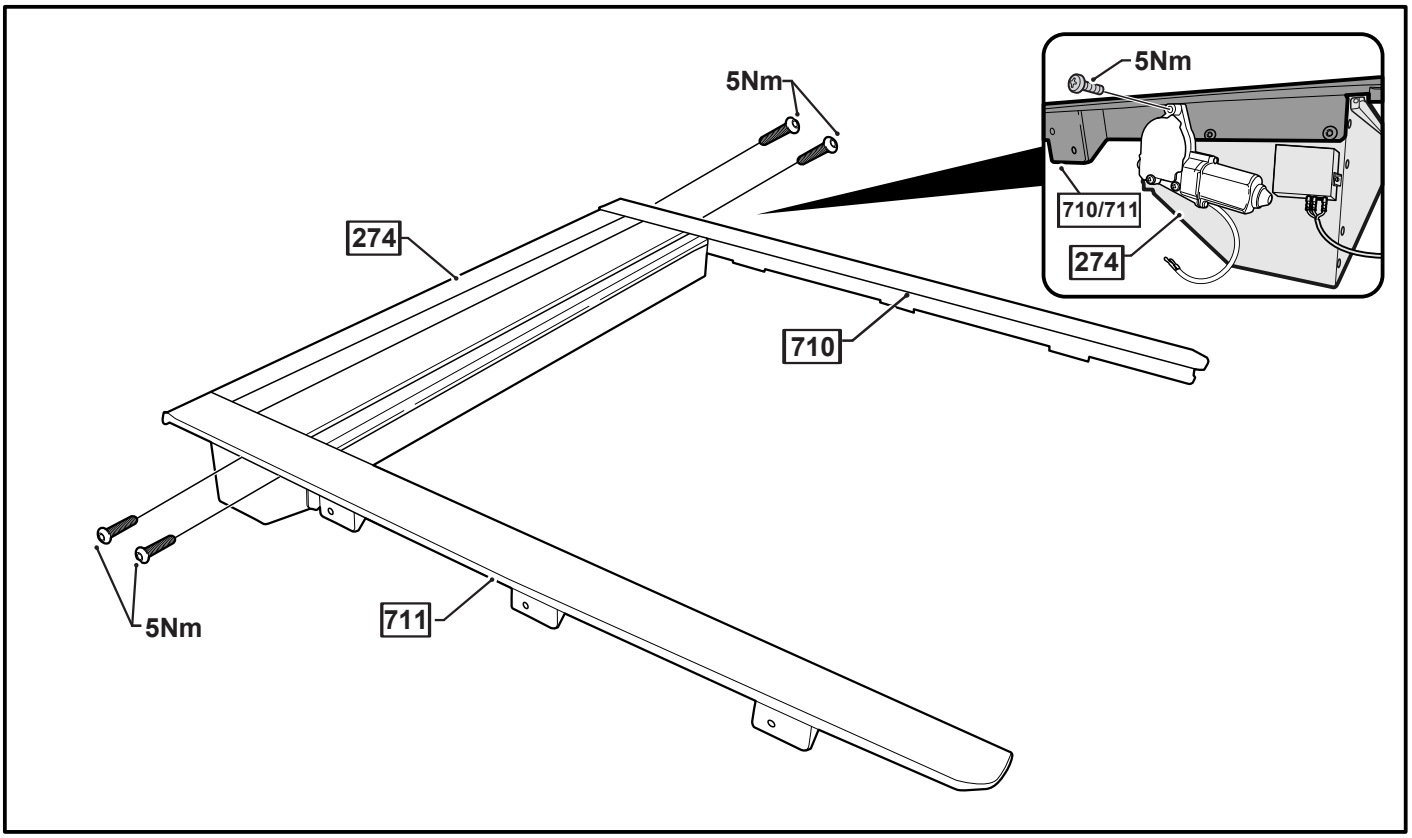

© Roll Я Cover

Step 14

Apply tar sealant to the gap under water channel.

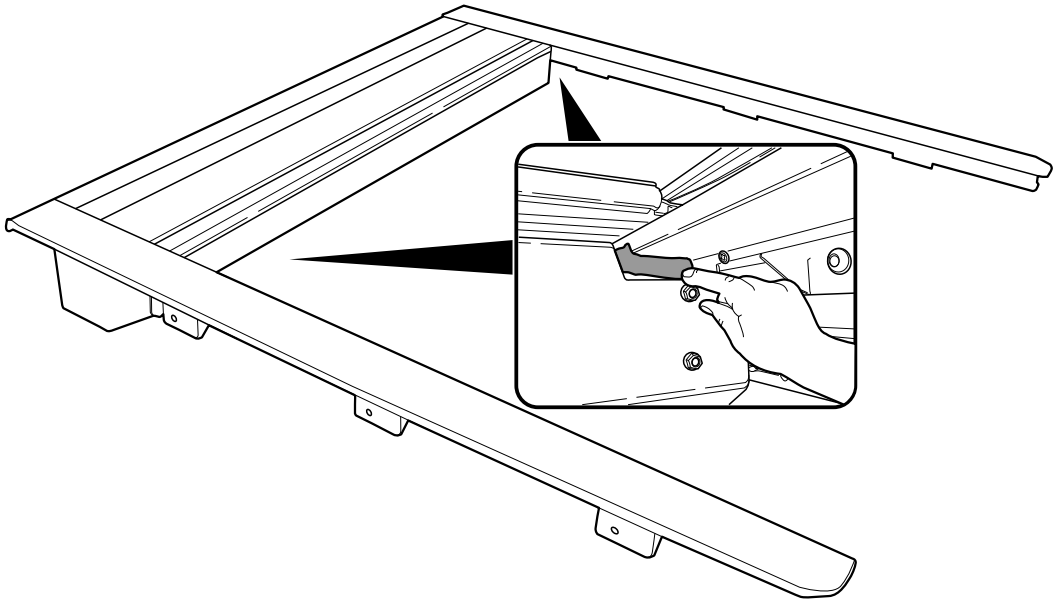

Step 15

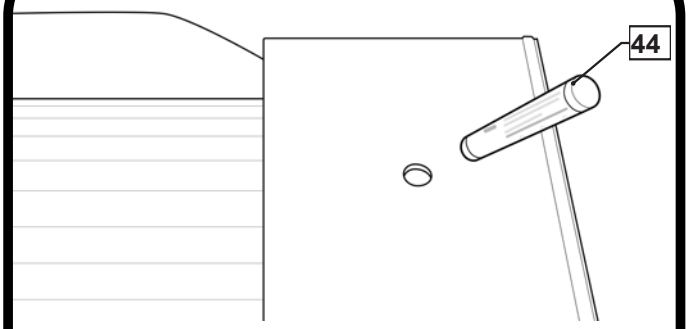

Apply 3M primer provided around all side rail holes.

Drivers side holes.

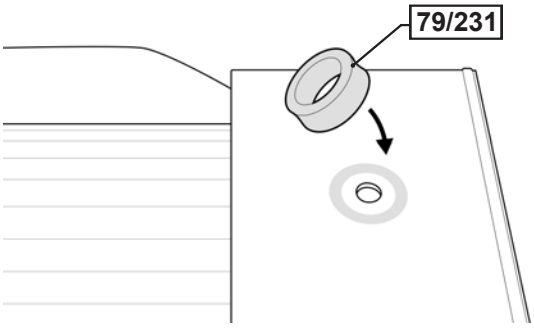

Peal away backing from foam sealant and stick to side rail. Note: round seals are for drivers side rail only.

© Roll Я Cover

Step 16

Passenger Side seal.

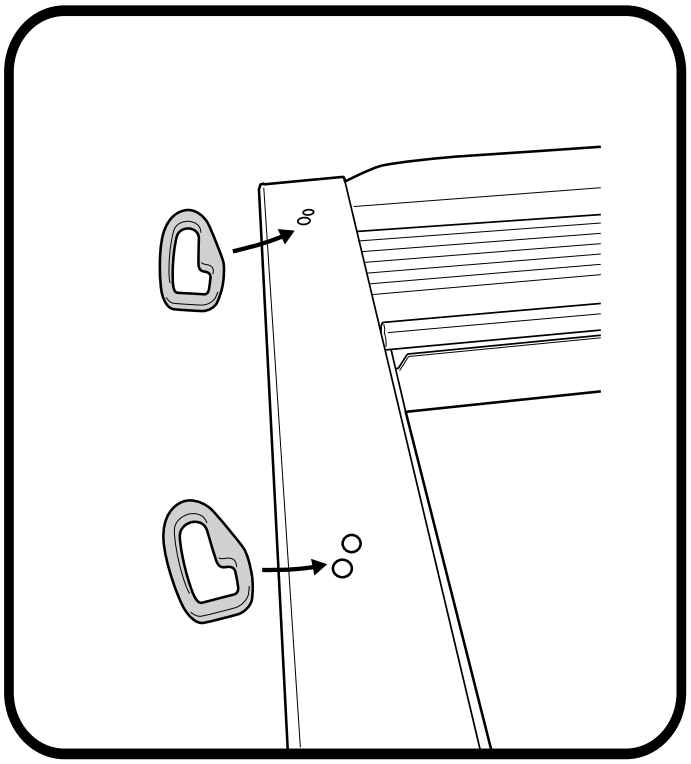

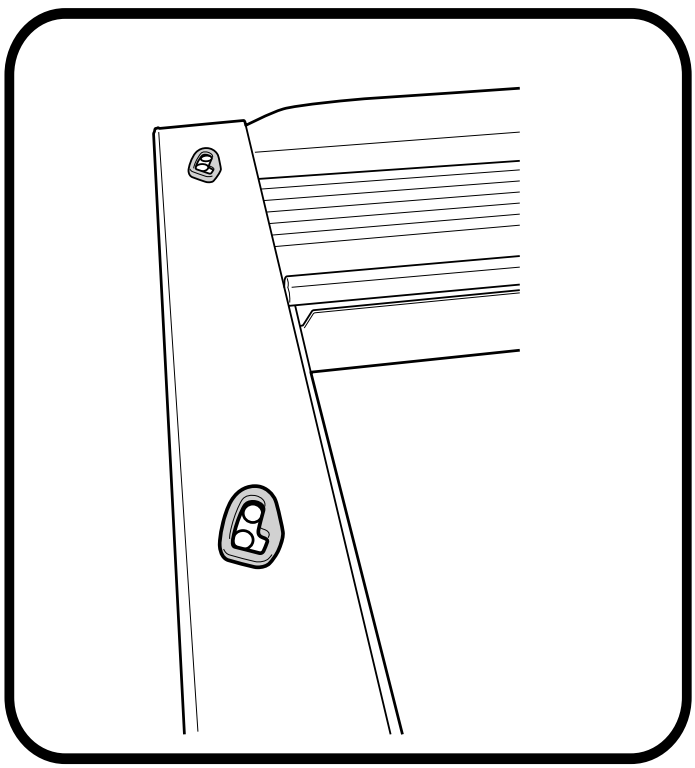

Step 17

Place the sports bars on a protective matt.

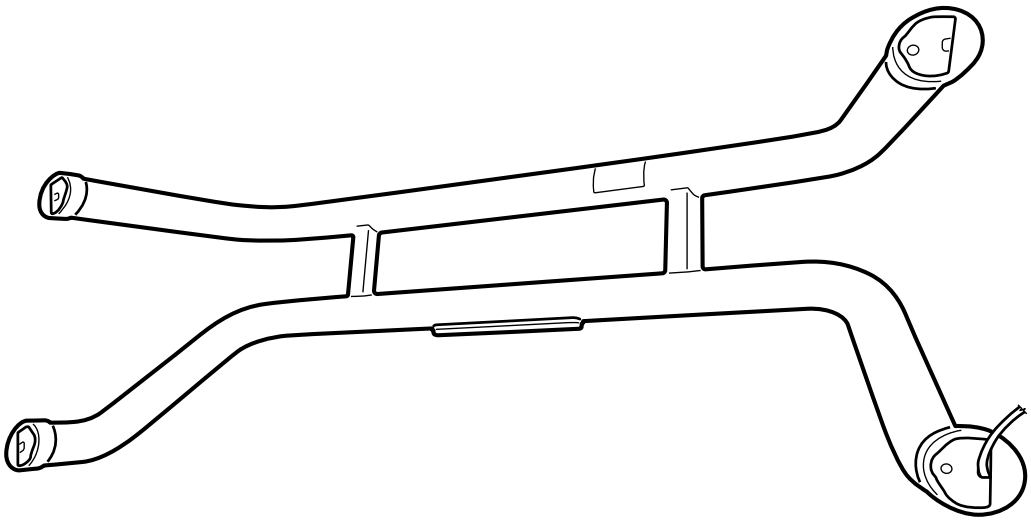

© Roll Я Cover

Step 18

Place the 1.6mm m10 washer as indicated, now repeat to all other legs of the sports bars.

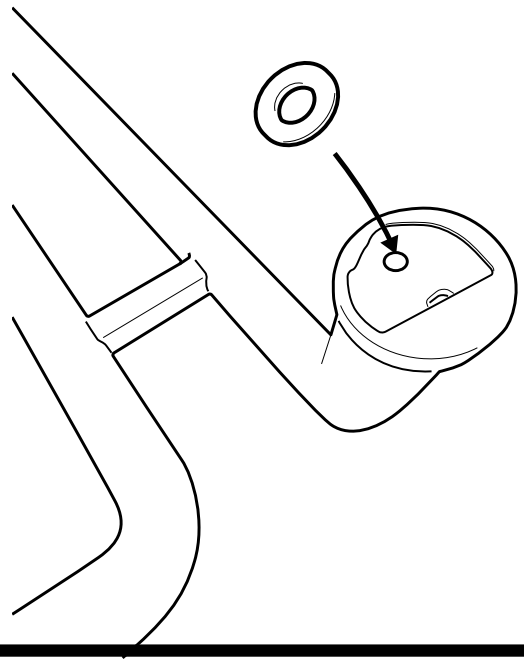

Fasten part number 704 (sports bar adapters) to the front legs of the sports bars.

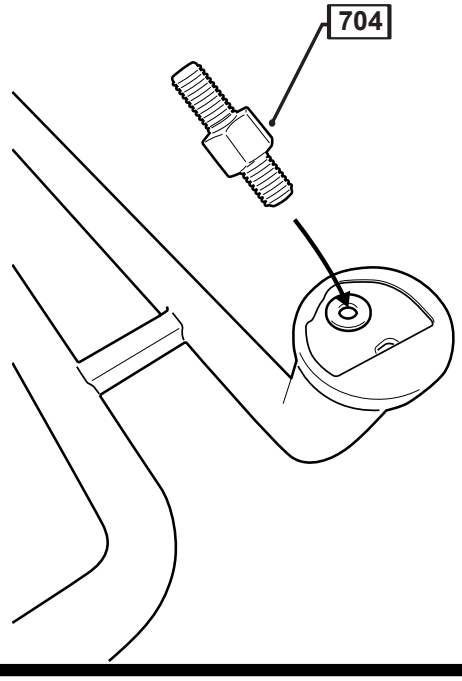

Step 19

Fasten part number 705 (sports bar adapters) to the rear leg of the sports bars.

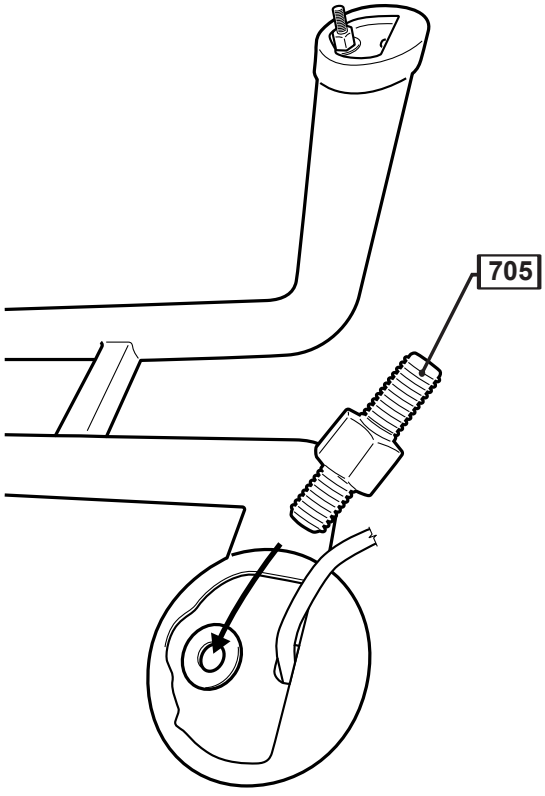

© Roll Я Cover

Step 20

Place Sportsbar on Roll R cover

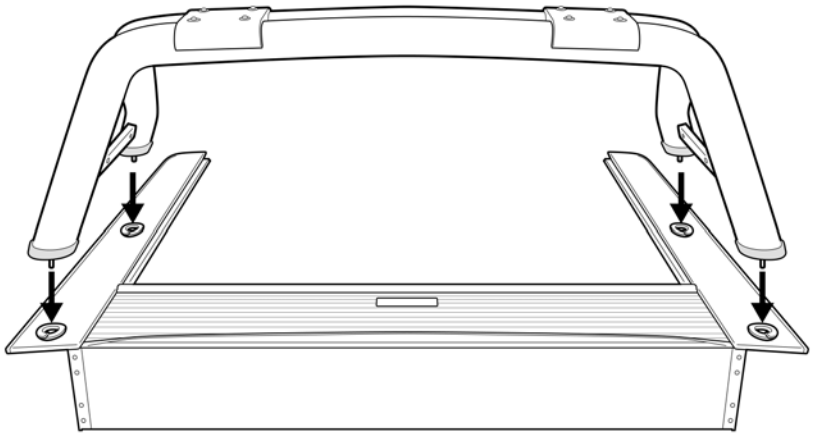

Step 21

Place flat washer and tighten with the nylock nut provided. Repeat on all four legs.

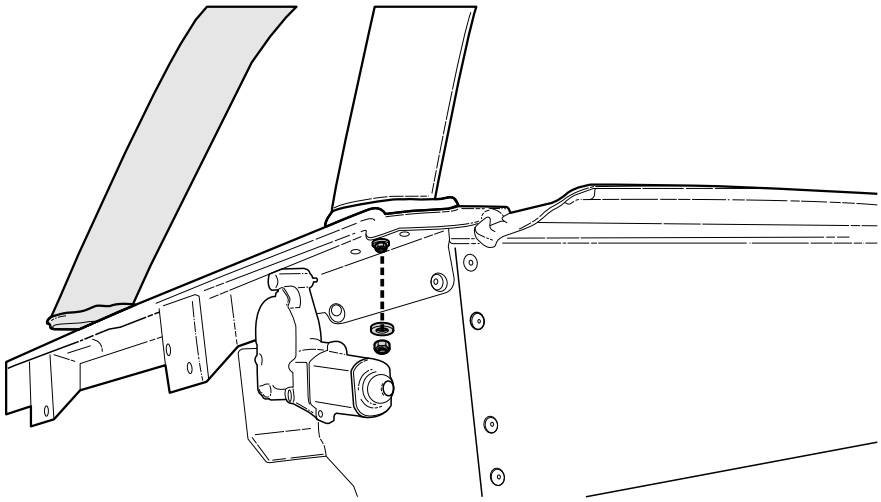

Note - Do not overtighten

© Roll Я Cover

Step 22

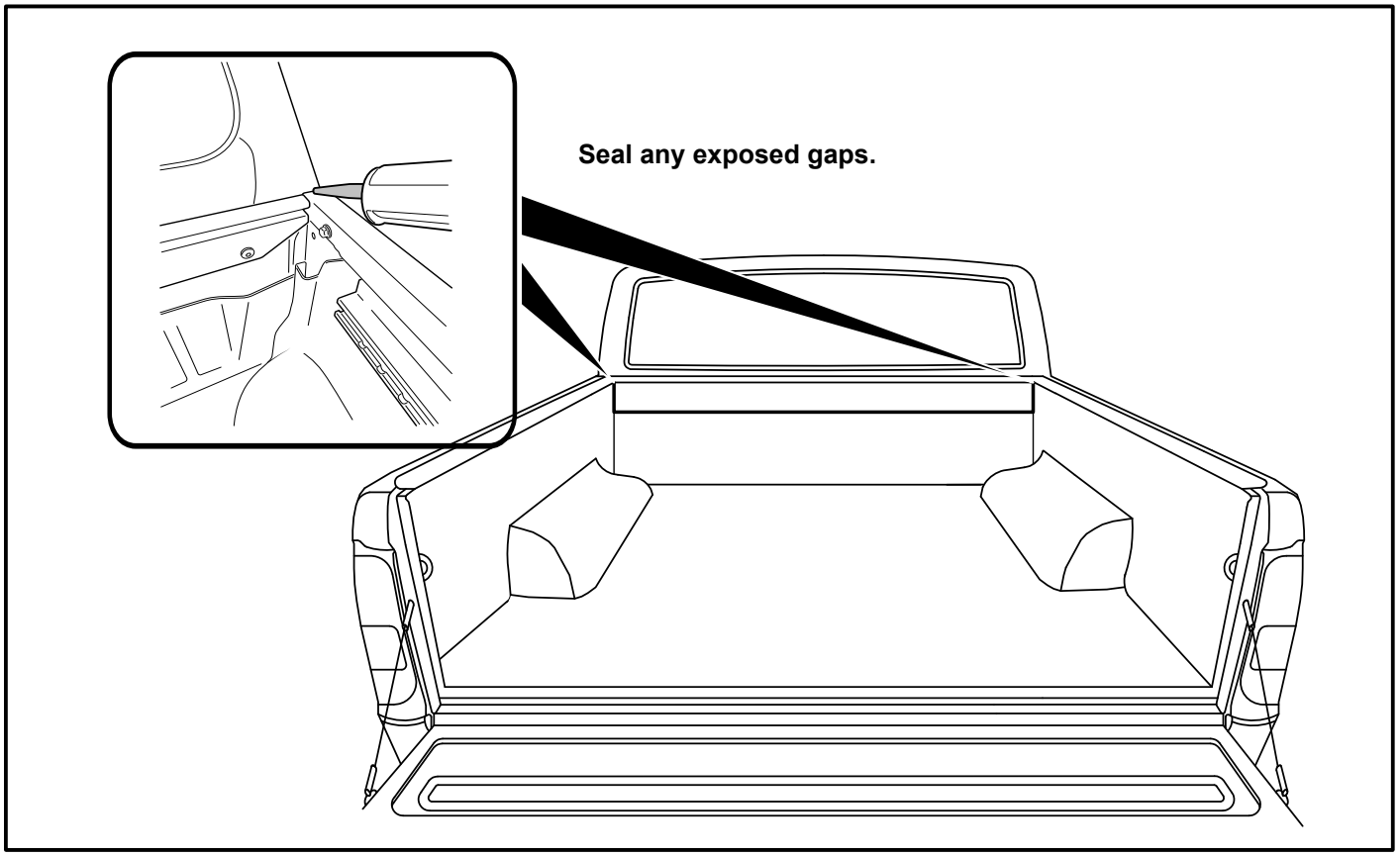

Step 23

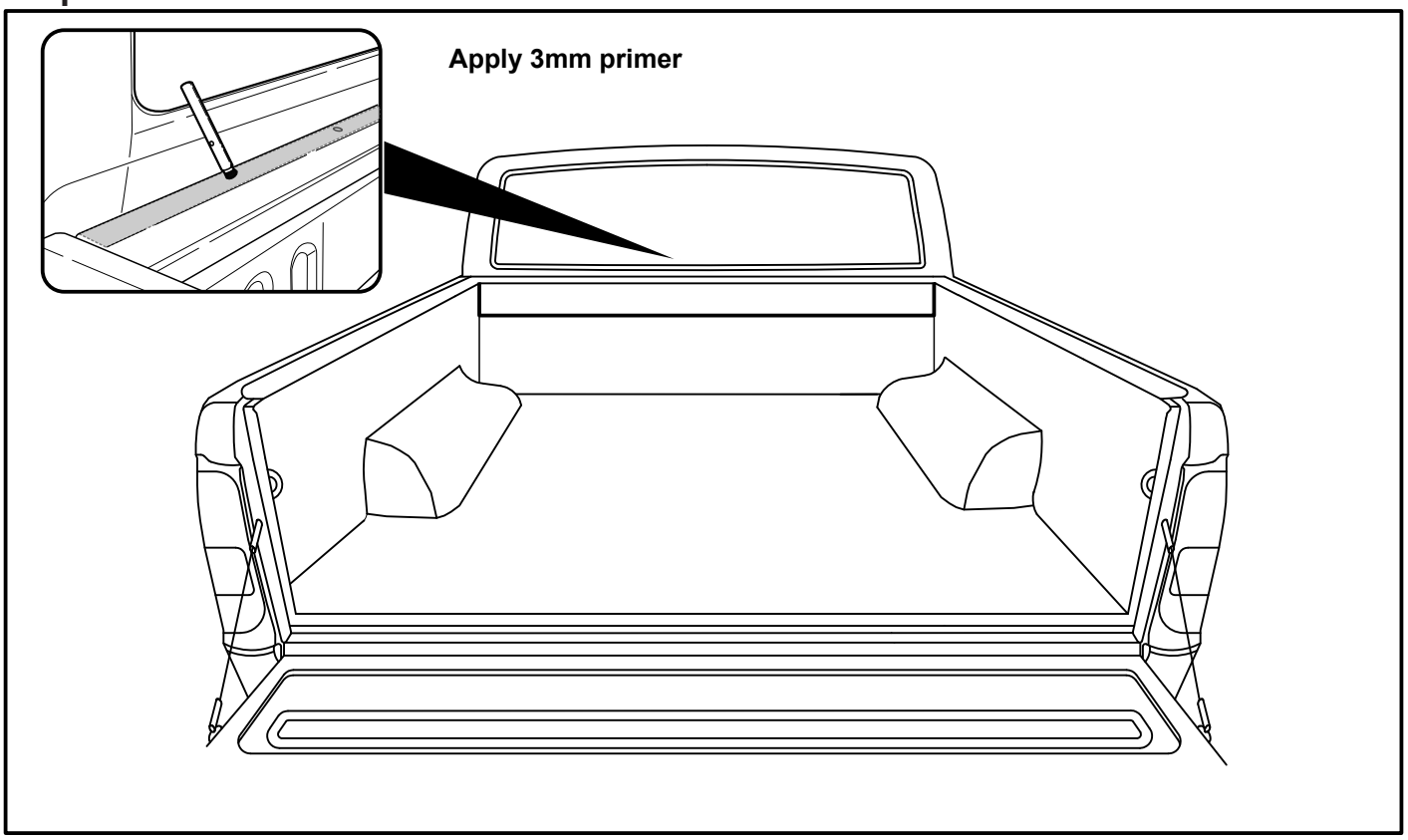

© Roll Я Cover

Step 24

Installing the Roll-R-Cover

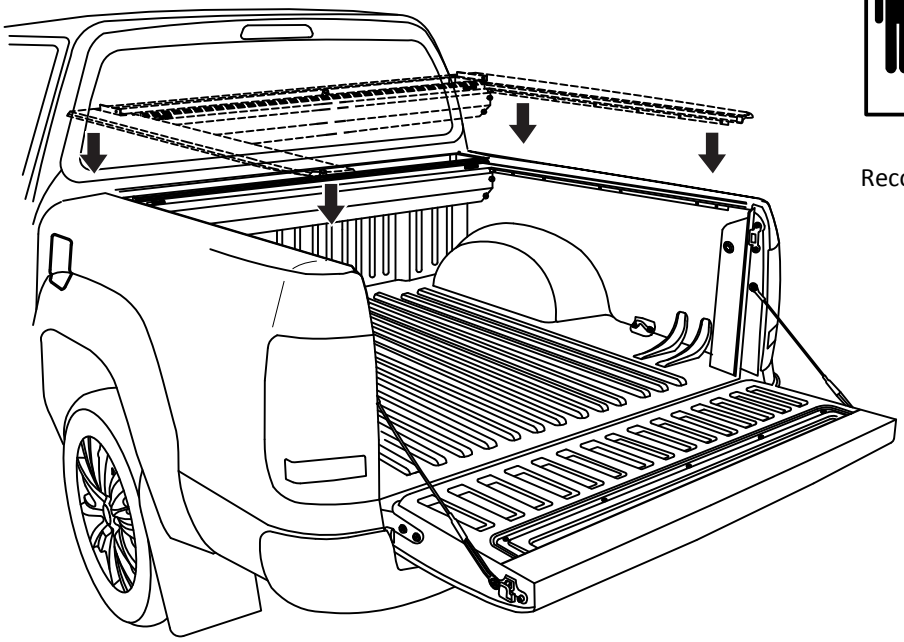

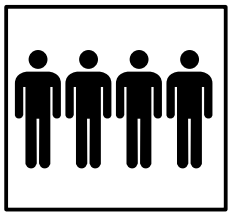

4 People
Recommended for lift

Step 25

Before dropping the Roll R cover into place on the tub, connect all relevant connections or plugs to the receiver and motor plug connection.

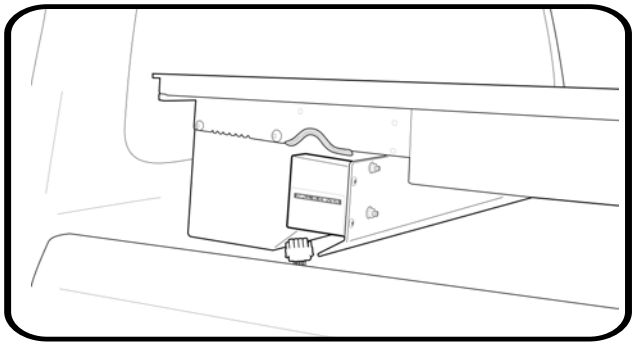

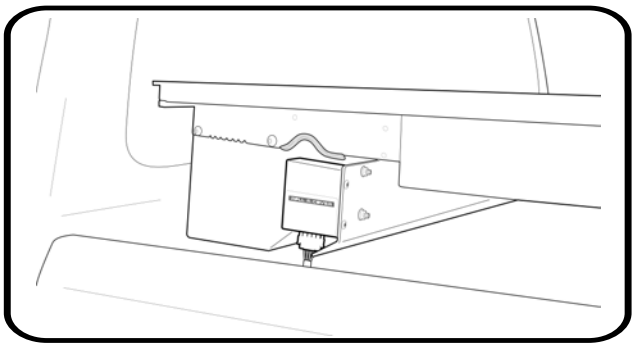

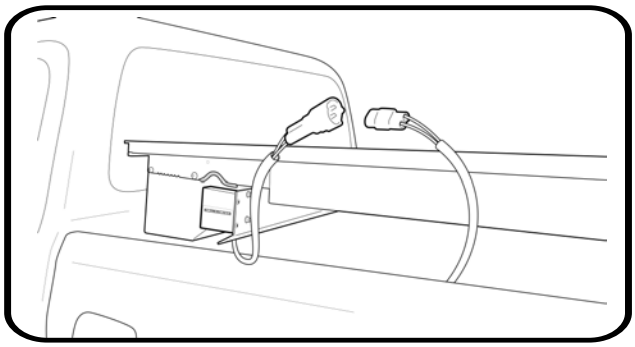

© Roll Я Cover

Step 26

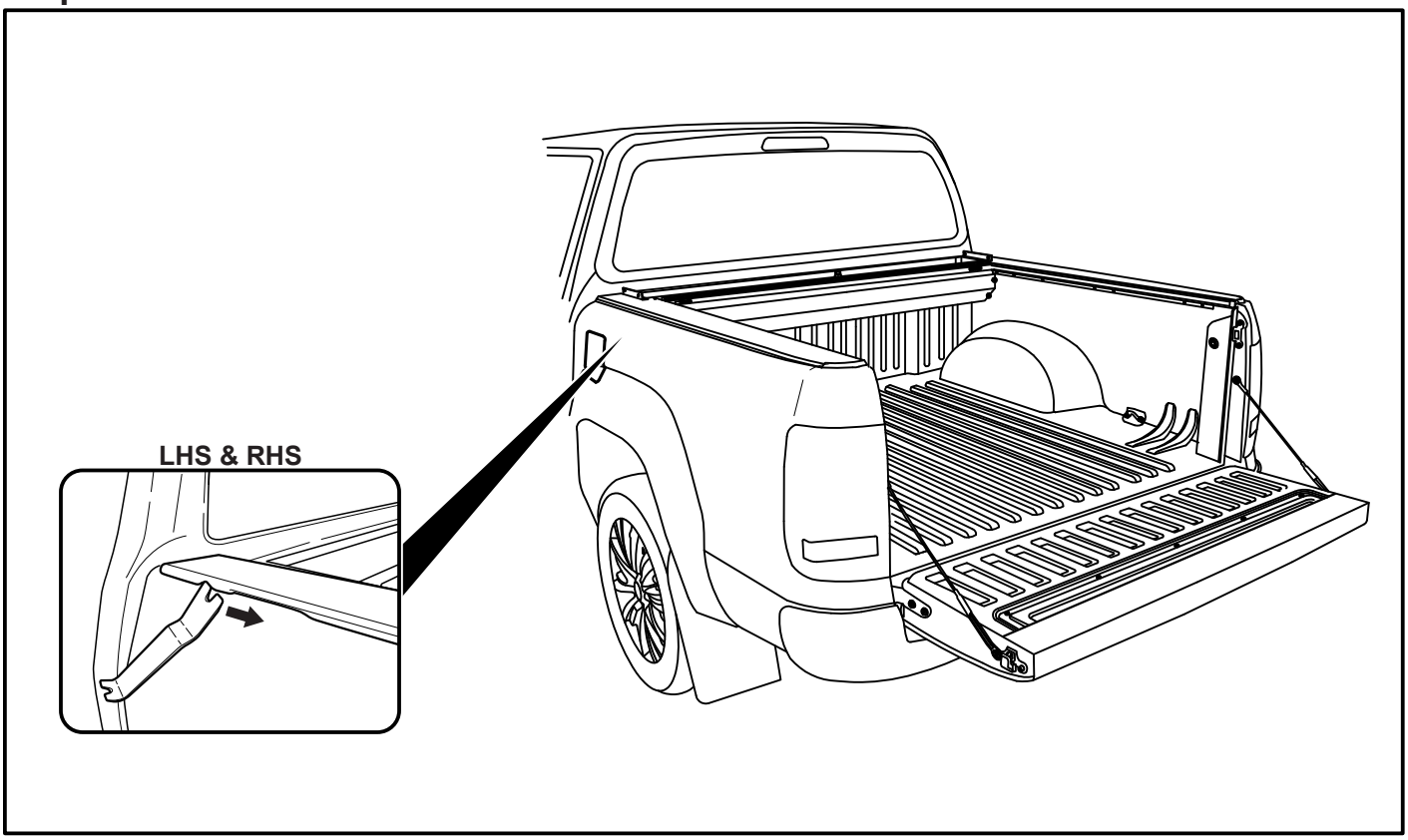

Step 27

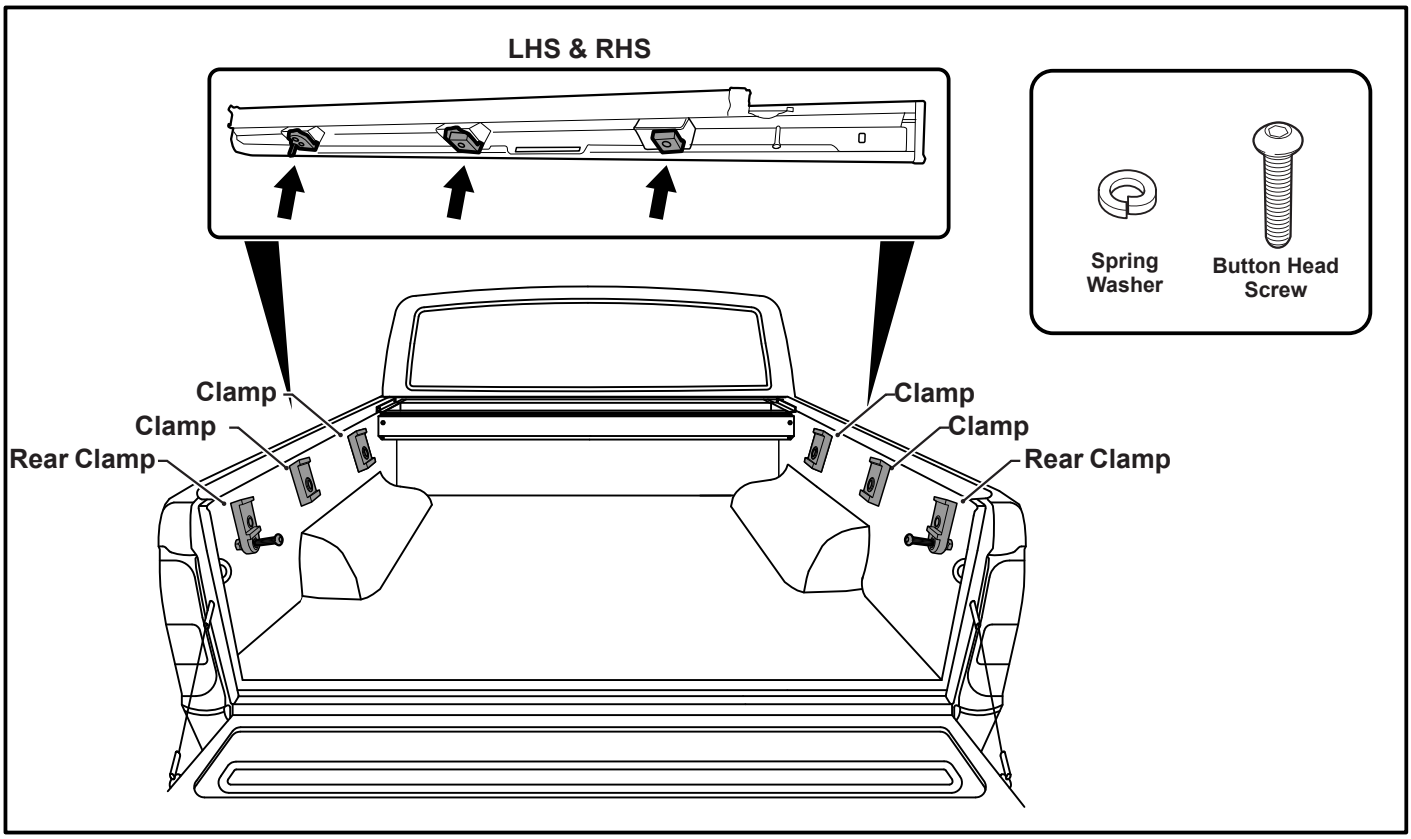

© Roll Я Cover

Step 28

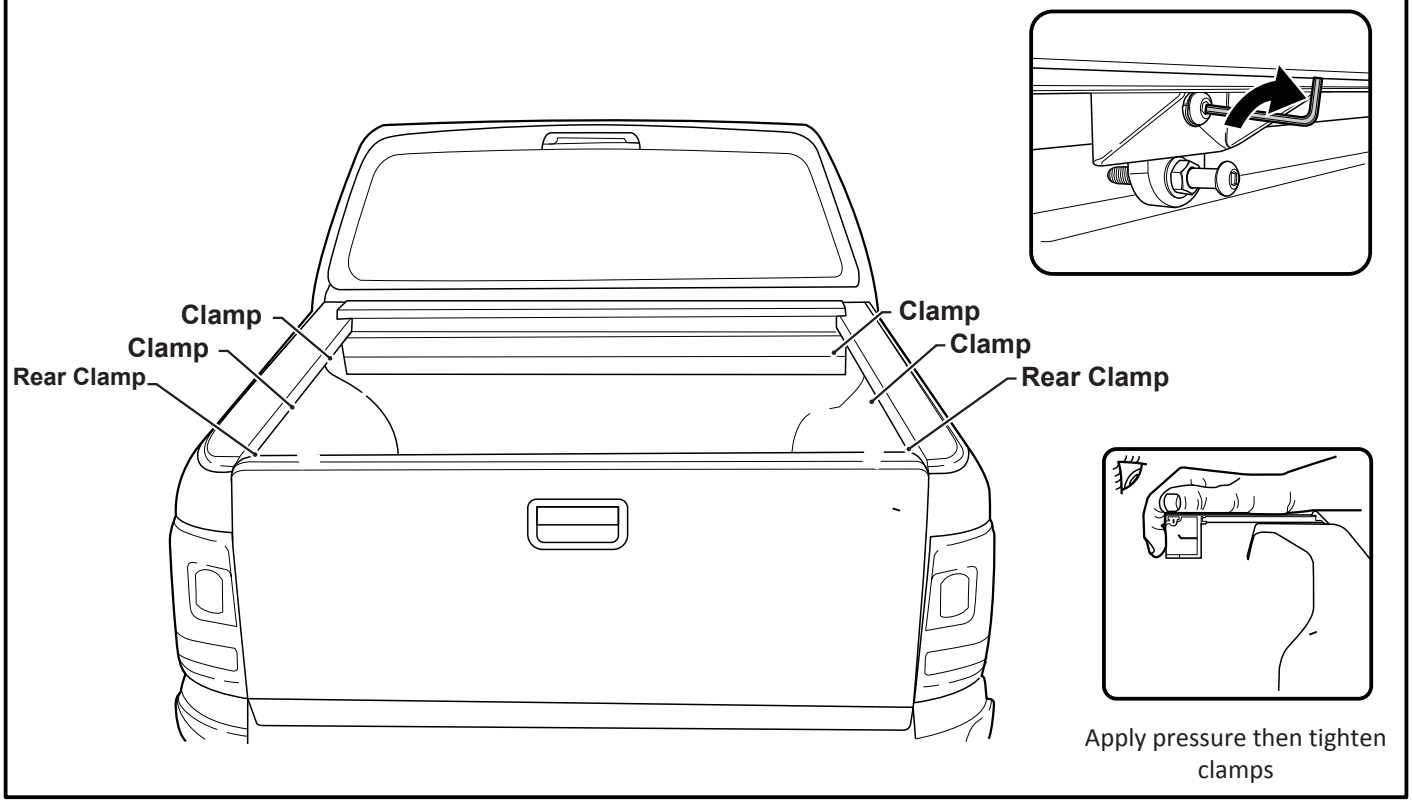

Step 29

If curtain doesn't meet the tailgate in it's fully closed position, loosen the clamps and shift the unit back.

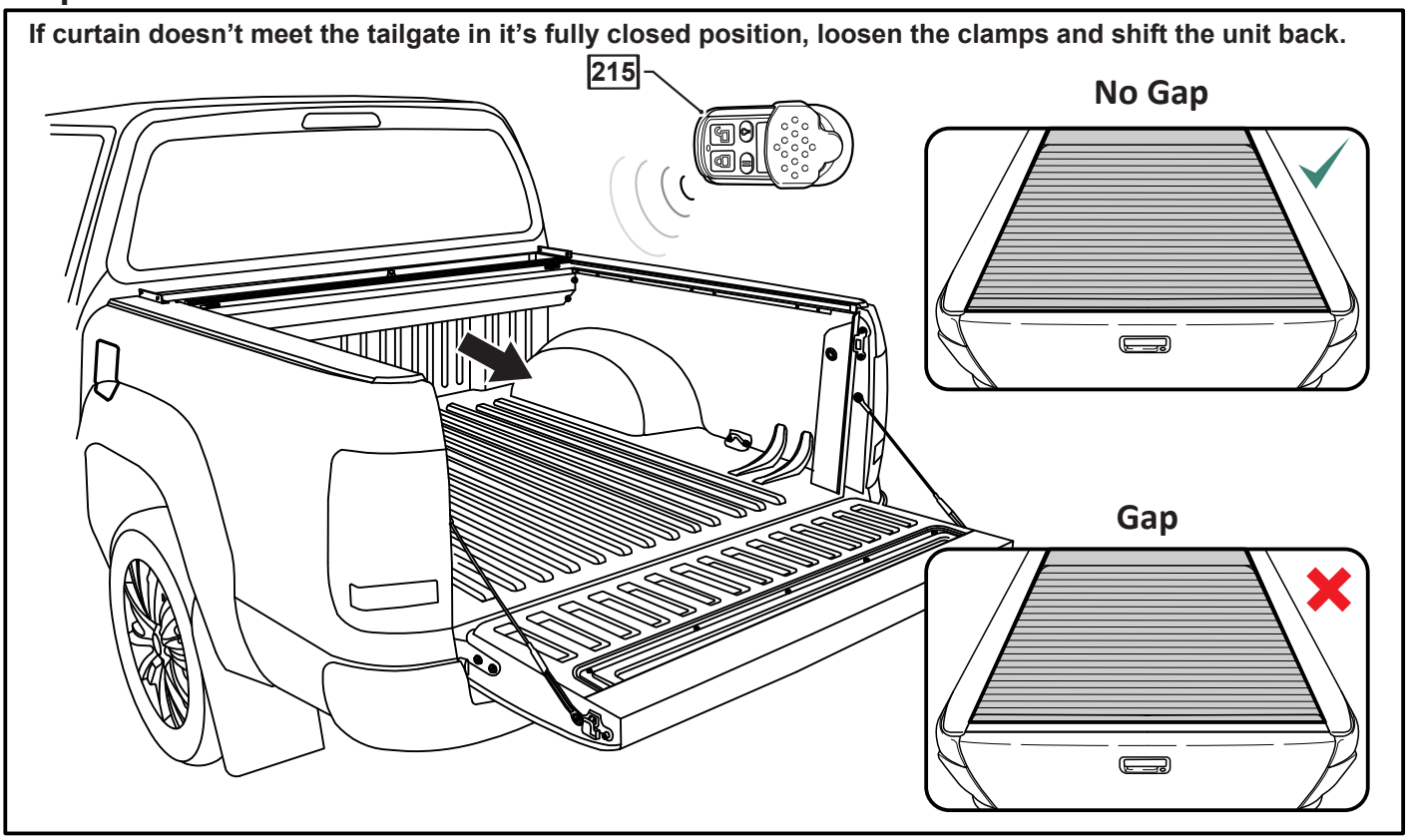

© Roll Я Cover

Step 30

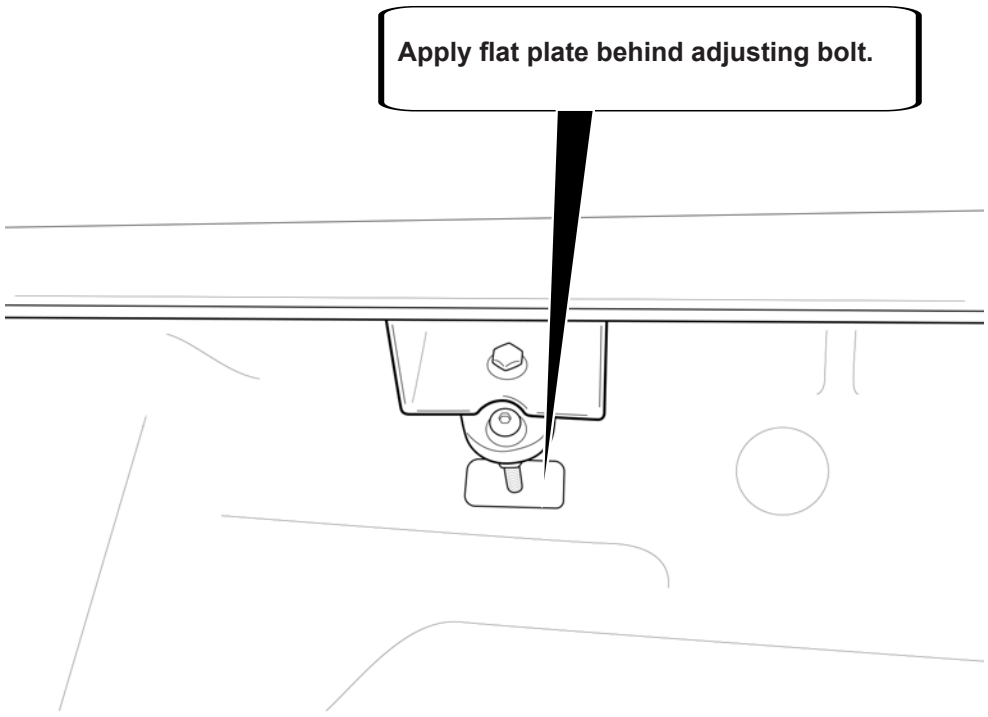

Step 31

Side rail rubber must have a 1mm gap from the top of the tailgate in the closed position.

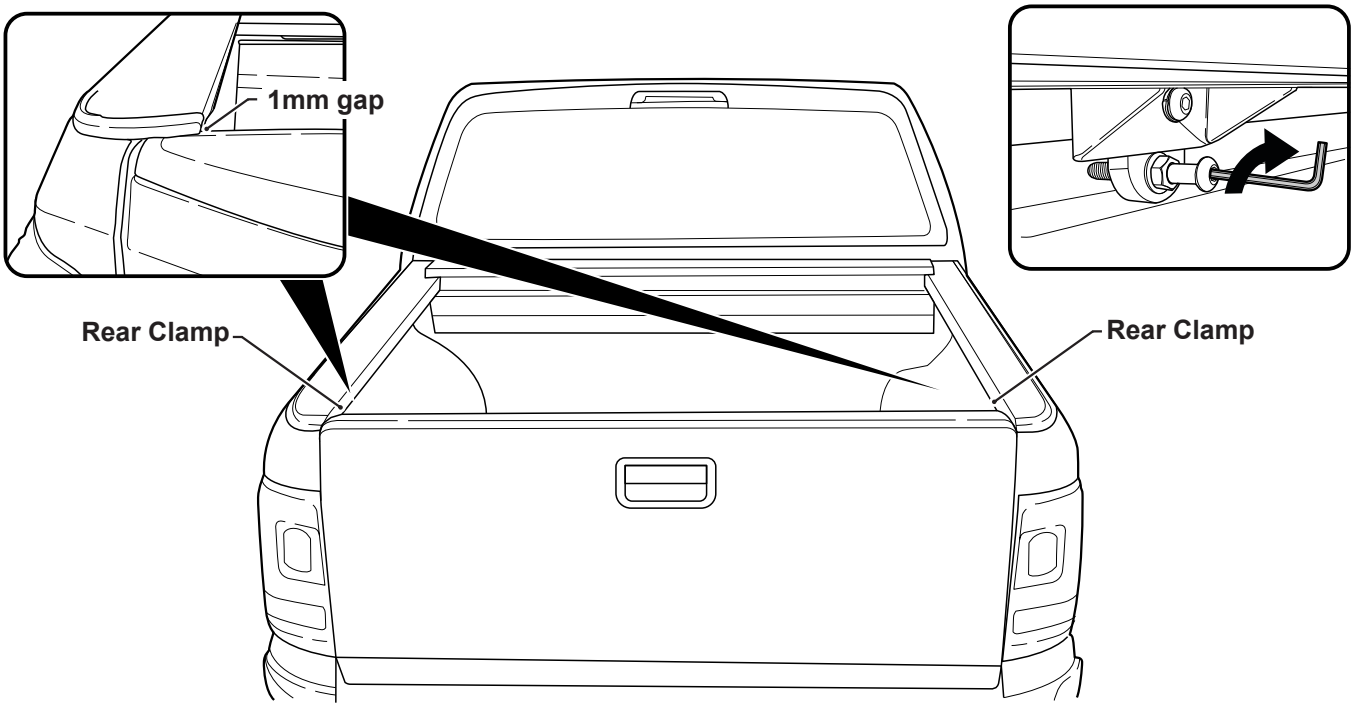

Rear clamp has an adjustment bolt. Drive the bolt in to lift the rear of the side rail till it clears the tailgate.

© Roll Я Cover

Step 32

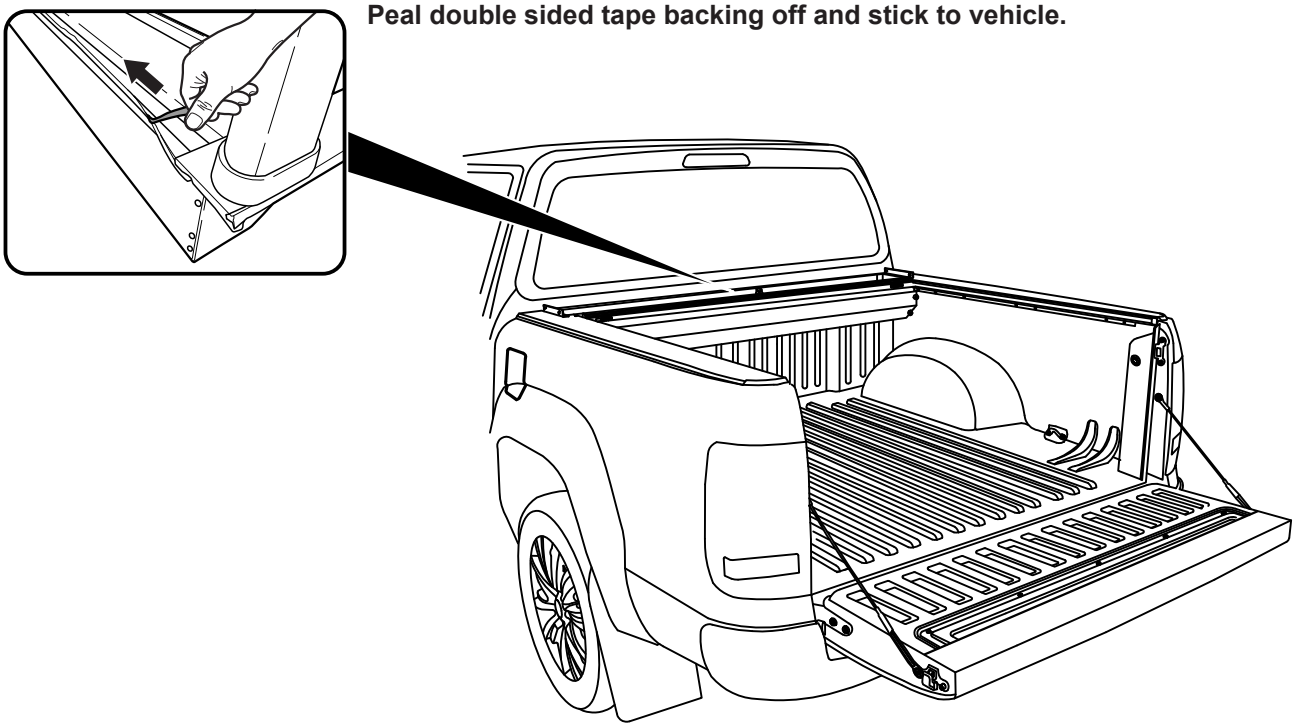

Step 33

Drill through bed and liner (check for obstructions).

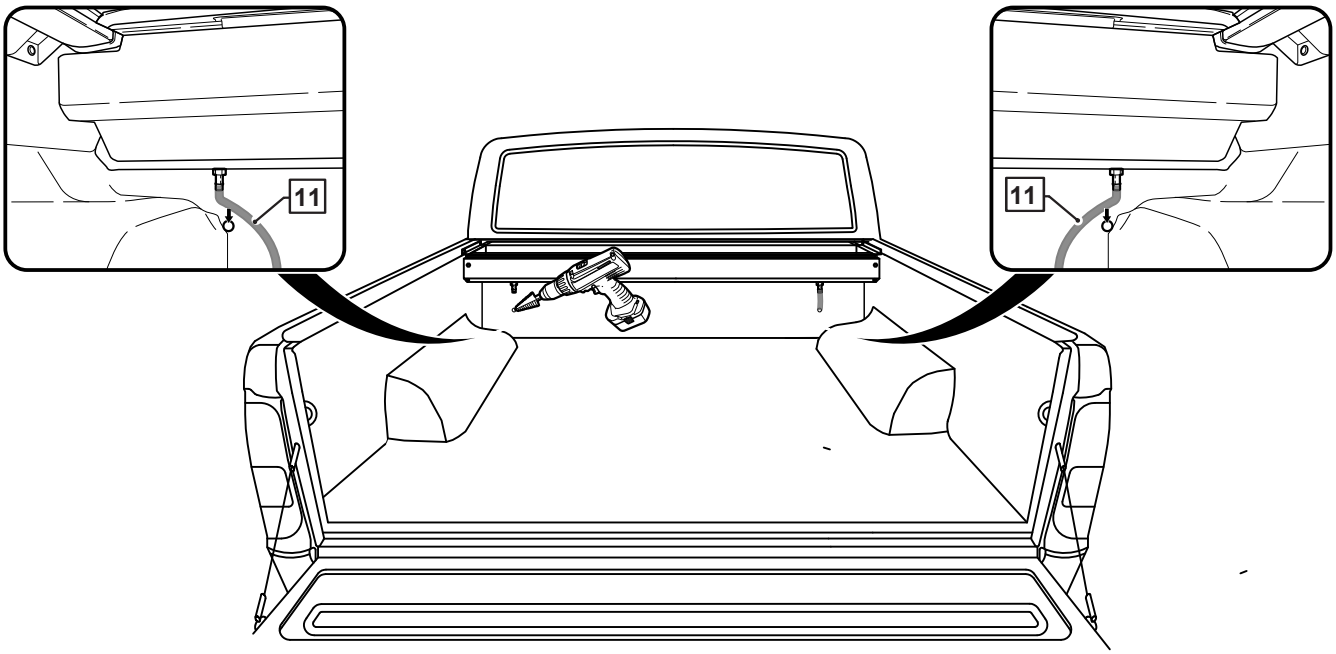

© Roll Я Cover

Step 34

Remove the tail light to check for obstructions before drilling

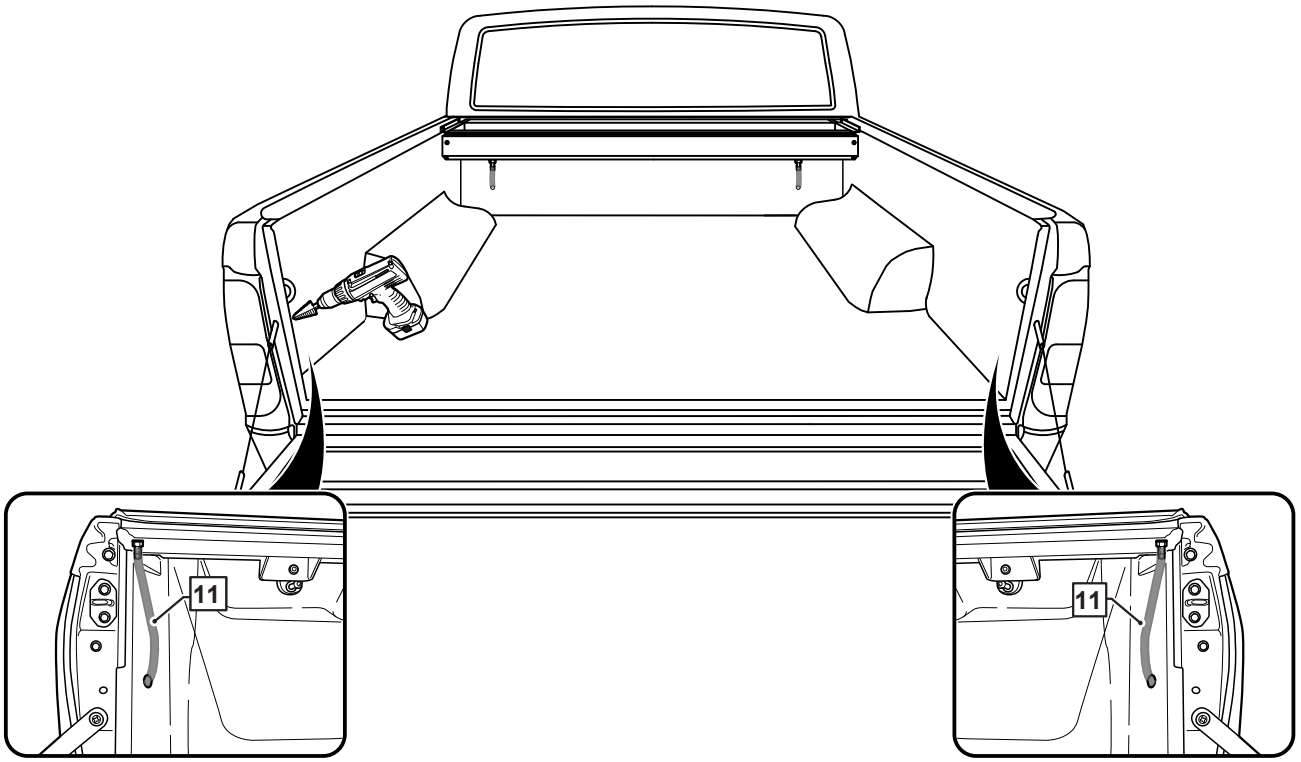

Step 35

Snap fit the top cover.

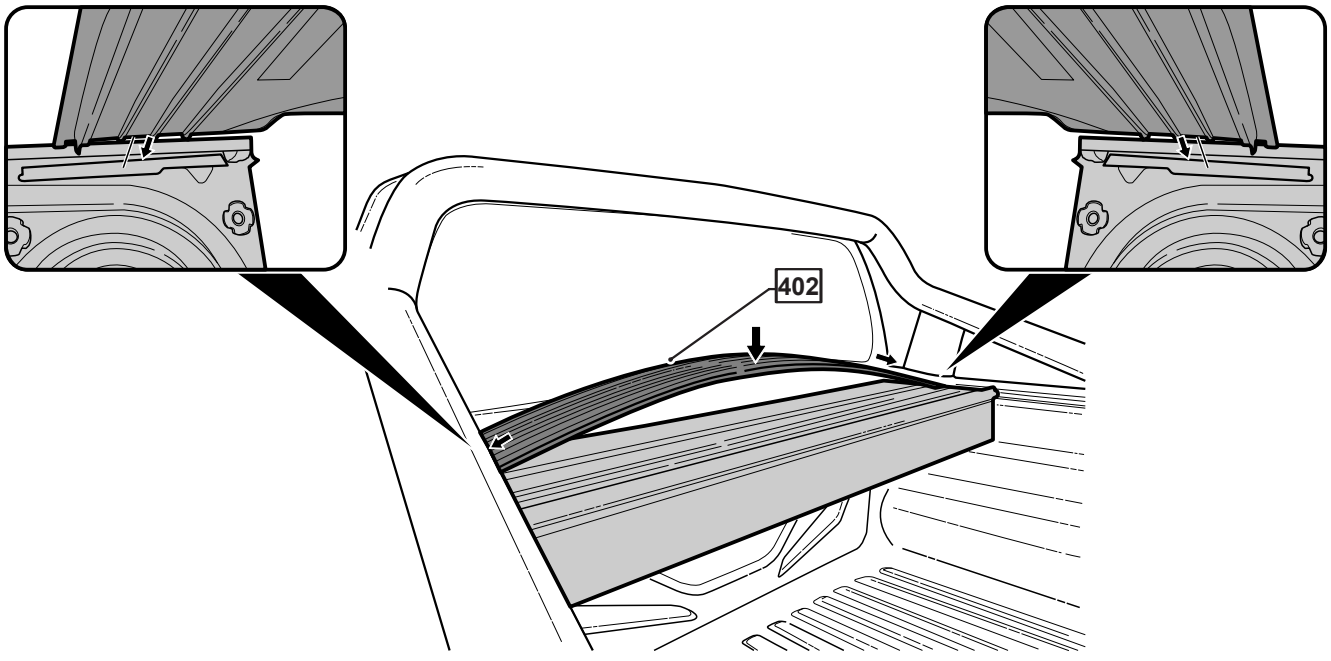

© Roll Я Cover

Step 36

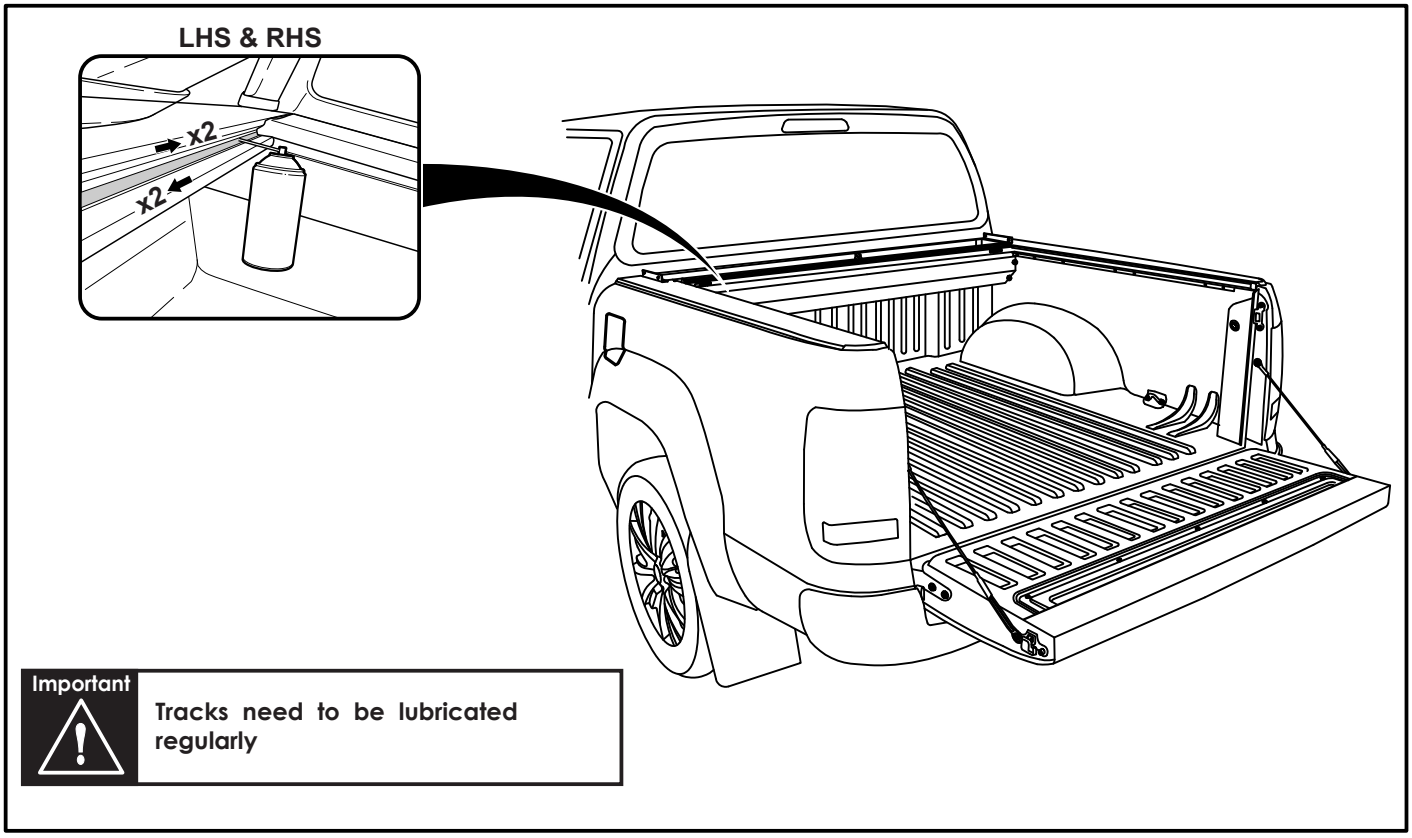

Important

Tracks need to be lubricated regularly

Step 37

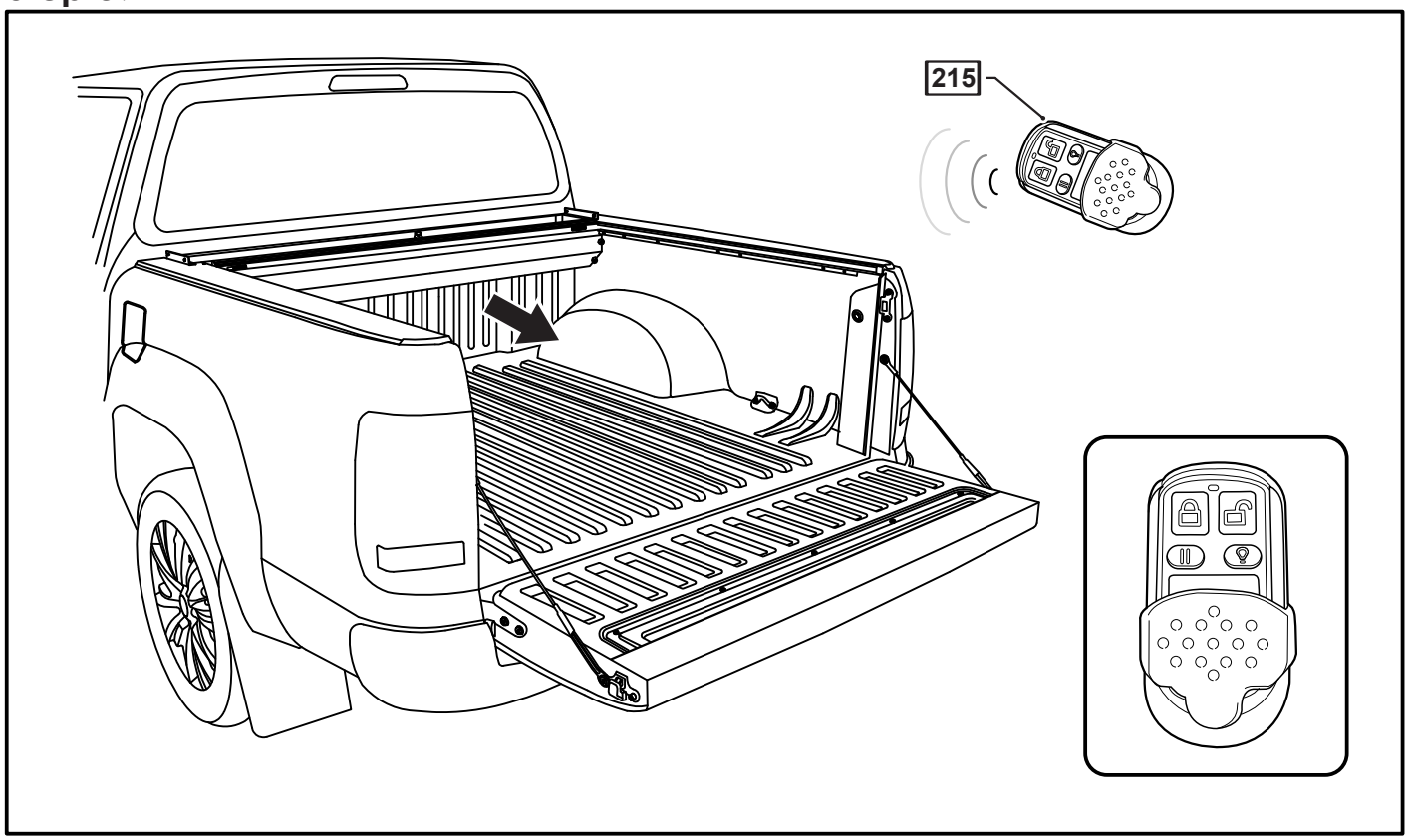

© Roll Я Cover

Step 38

E. & O.E. This document is copyright and must not be used except as permitted below or under the Copyright Act 1968. You may reproduce and publish this document in whole or in part for your or your organisation's own personal or internal compliance, educational or non-commercial purposes. You must not alter or amend this document in any way. You must not reproduce or publish this document for commercial gain without the prior written consent of the copyright owner.