WWW.HSPUTELIDS.COM

Part No: C43R-S3

INSTALLATION INSTRUCTIONS

Vehicle Model: To suit Holden RG Colorado Dual Cab with extended factory sports bar 2016+

INSTALLATION TIME: 2 Hours (Approximately)

IMPORTANT	• Do not stand/sit or rest heavy objects on Roll R Cover • Humans or animals are not to be under the closed cover at any given time • Tonneau Cover is not dust or water tight • If contact with volatile chemicals occur, clean Cover with mild detergent and water solution
Care Instructions	• Read Instructions fully before commencing installation. • Clean Cover with a mild detergent and water solution • Do not use abrasive cleaners or solvents • Refer to manufactures instructions applicable to power drill. • Protect Tub floor against scratches during installation process.
Maintenance	Refer to Maintenance instructions.
Tools Required	• Pen / Marker • Centre Punch • Drill & Drill bits • Caulking Gun • Silicon - Non Acetic • Scissors & Knife • Spanner & Socket • Tape measure • Holesaw • Filing tool • Soapy water solution • Allen Key set • Screw driver • Rust Inhibitor • Trim Removal Tool

PERSONAL PROTECTIVE EQUIPMENT:

Rubber Gloves

Goggles

Hearing Protection

© Roll Я Cover

BOX CONTENTS

LEFT & RIGHT SIDE RAIL

S2.5-DC-AE-002ps-C4

S2.5-DC-AE-003ds-C4

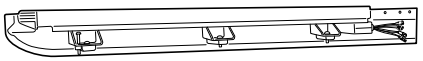

CANISTER ASSEMBLY

S3-DC-AF-DM4R_MB4R-001/002

CANISTER TOP COVER

S2.5-DC-AE-005 -C4

STANDARD KIT

COVER END CAPS

S2.5-DC-PI-004ps

S2.5-DC-PI-004ds

COUNTERSUNK SCREW Qty - 4

FLAT PLATE Qty- 2

CABLE TIE Qty x 16

BATTERY LOOM S2.75

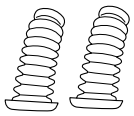

Drainage pipe Qty - 2

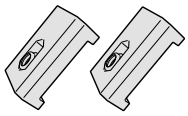

SIDERAIL CLAMP Qty - 6

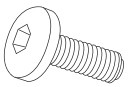

M8 x 35mm Qty - 6

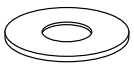

M8 WASHER Qty - 6

M8 SPRING WASHER Qty - 6

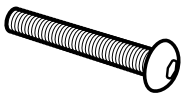

M8 x 70 mm

Qty - 2

M8 NUT Qty - 8

SPECIFIC KIT C4R

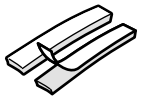

50449 D-SPONGE

Qty-2

CL-LOOM-LONG

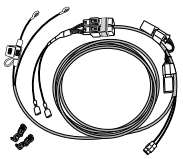

C-PATCH-S3

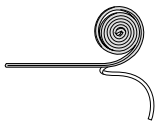

Foam seal Qty - 1.7m

SPORTS BAR KIT C43R

C5 BRACKETS Qty-4

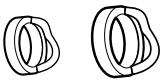

SIDERAIL HOLE GASKET Qty -4

3M PRIMER

M8 FLAT WASHER

Qty - 4

M8 NYLOC NUT Qty -4

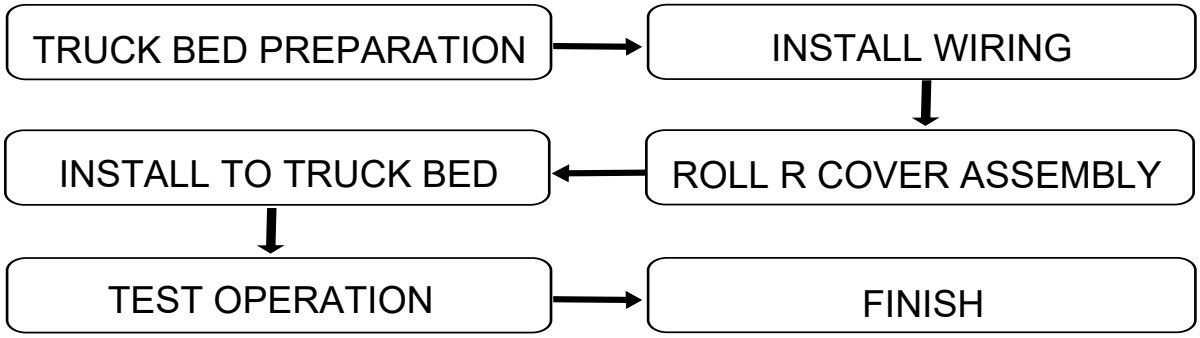

© Roll Я Cover

TUB PREPARATION

If the Vehicle is fitted with a cabin guard or sports styling bar, remove from Ute Tub (truck bed).

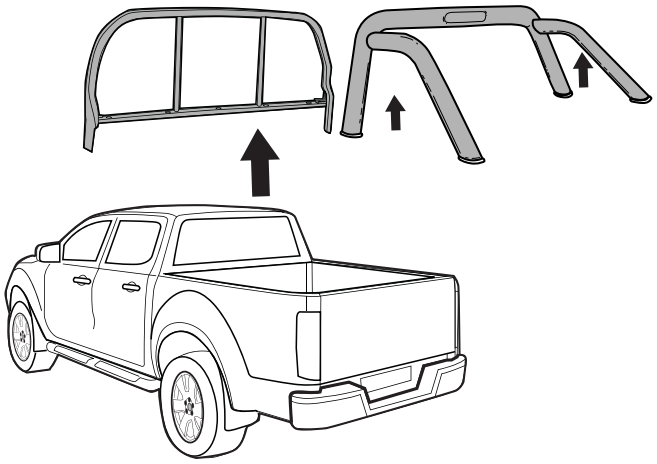

Clean are as indicated.

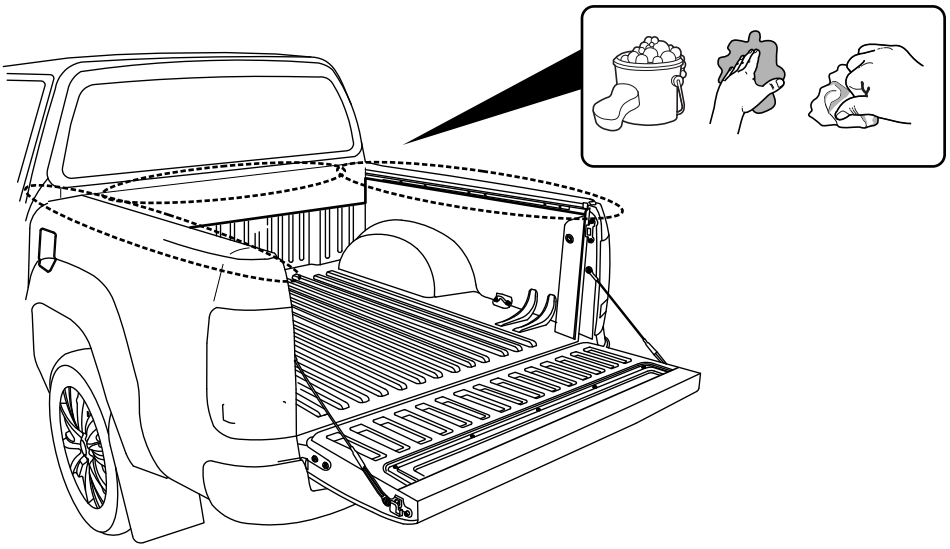

Measure 10mm down from top of tailgate and trim tailgate liner.

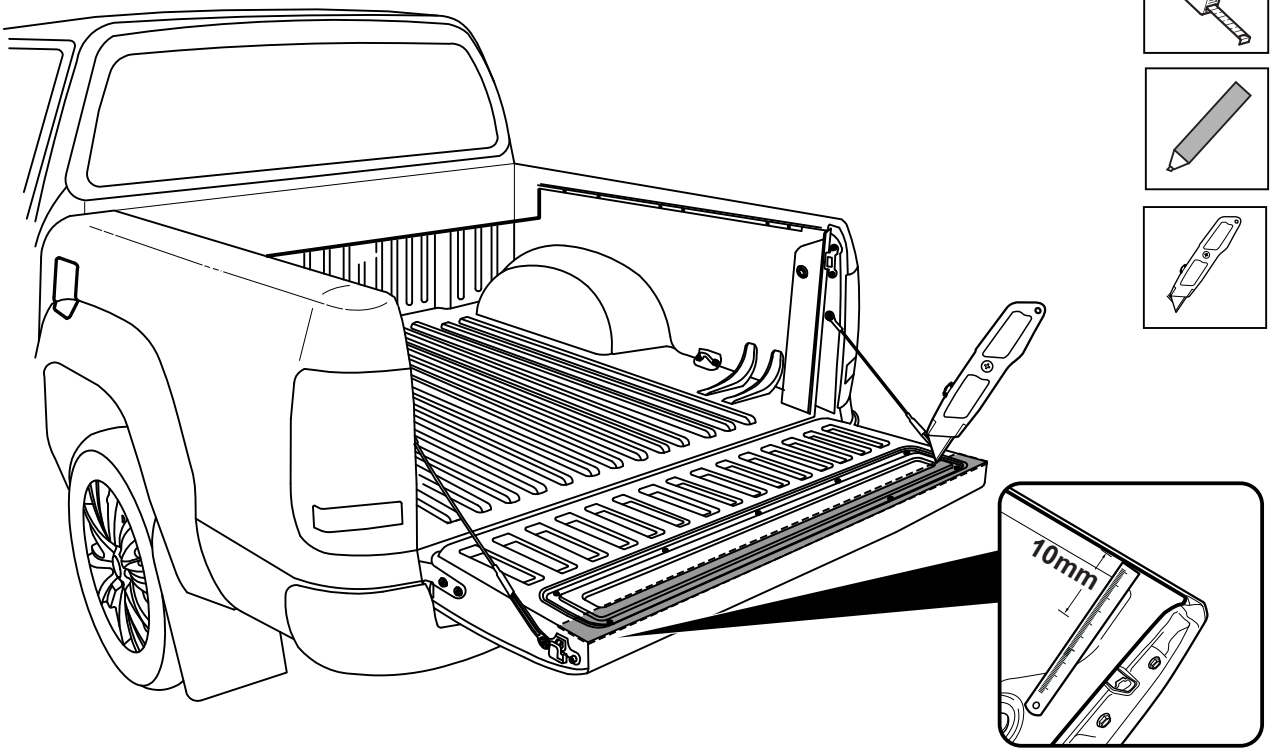

© Roll Я Cover

Measure 160mm down from top of Ute bed (head rail) and mark across to the other side.
Trim front of bed liner by 160mm from the top of the Ute bed as shown.

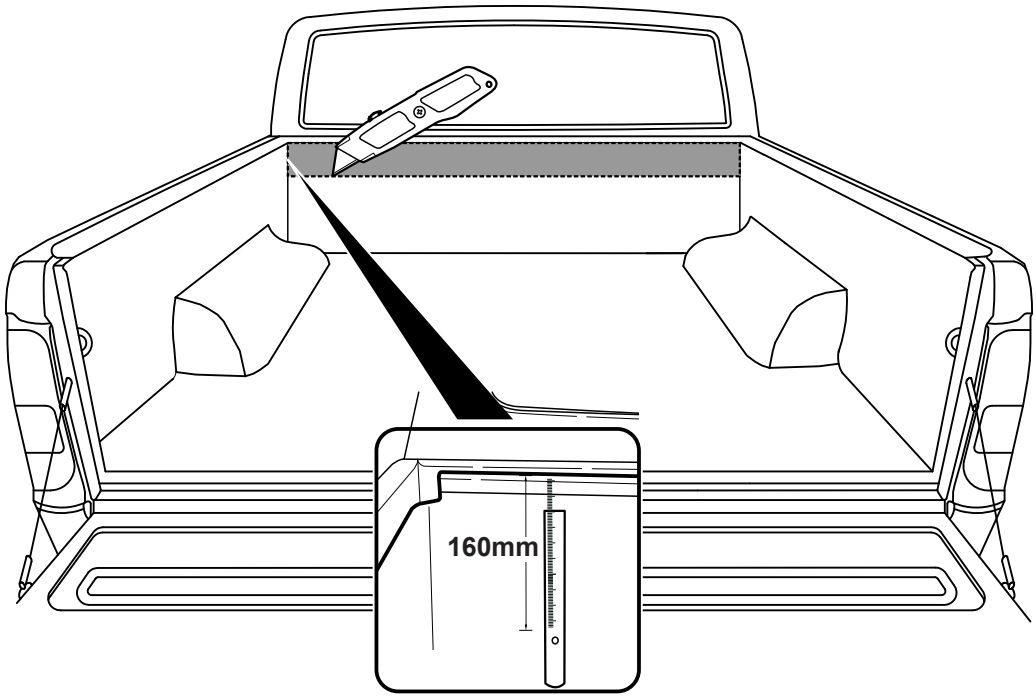

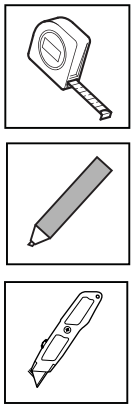

Cut a 20mm split for bed liner to flex.

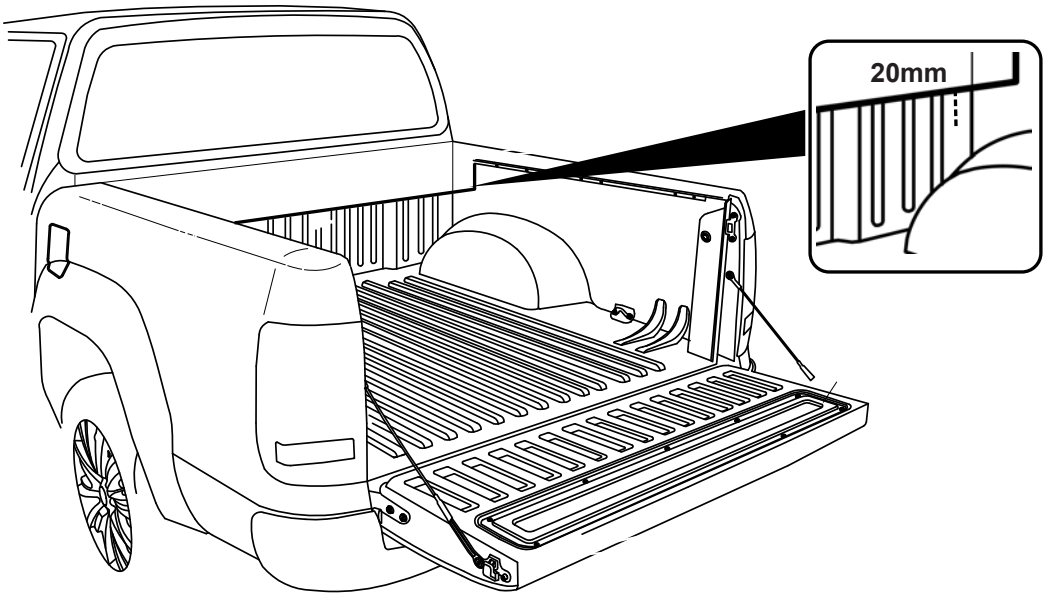

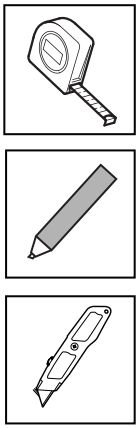

Measure down from top of assembly bar 190mm & 100 mm from inside wall of bed liner as shown. Repeat to the other side. Using a 50mm hole-saw drill the liner only as indicated.

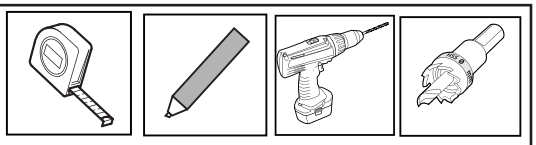

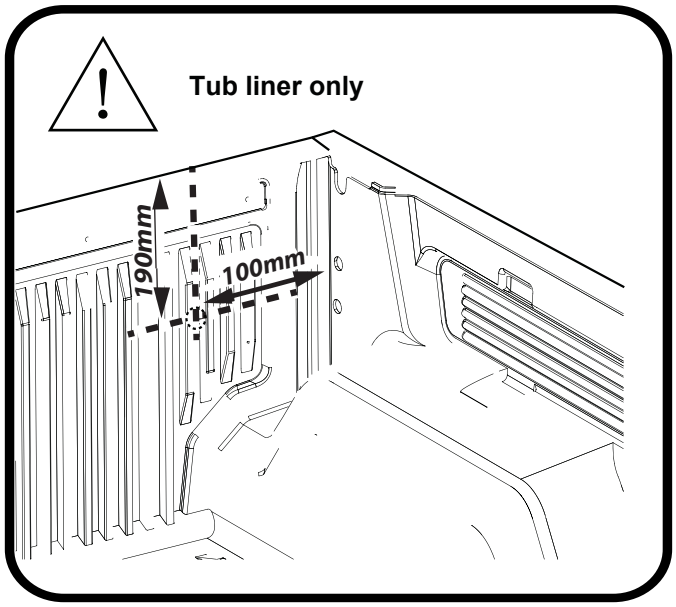

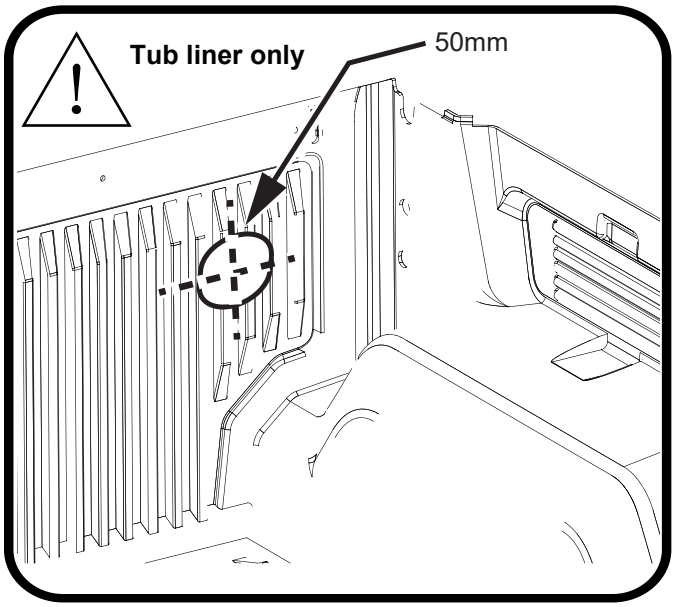

Measure down from top of headboard 190mm & 100mm from inside wall of bed as shown. Repeat to the other side.
Using a 30mm hole-saw drill through tub front panel, file away any sharp edges. Apply anti rust coating. Repeat to other side.

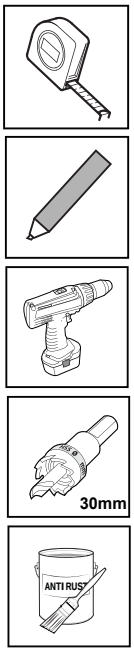

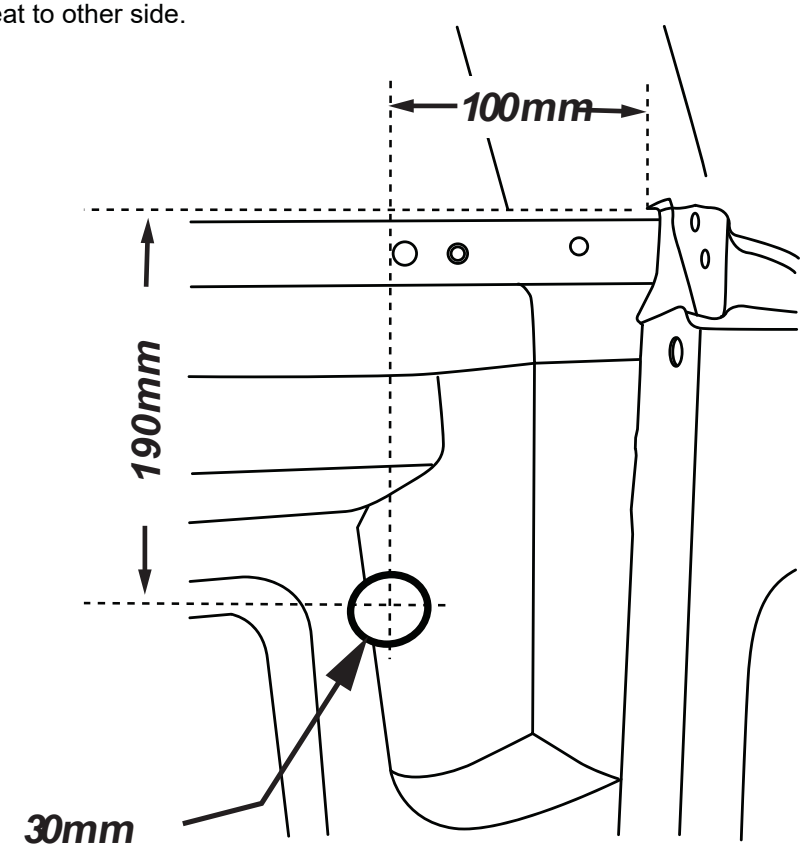

ATTENTION: Do not exceed 30mm hole.

© Roll Я Cover

Carefully unpack the box.

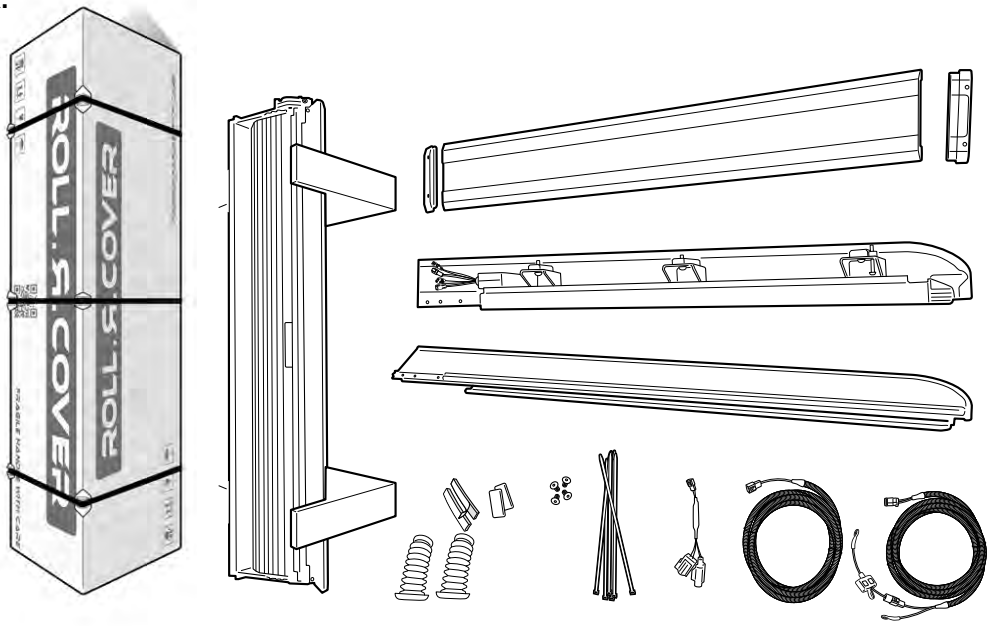

Run foam seal provided along the front (inside edge towards tailgate) of the tub to make head-rail level with sides.

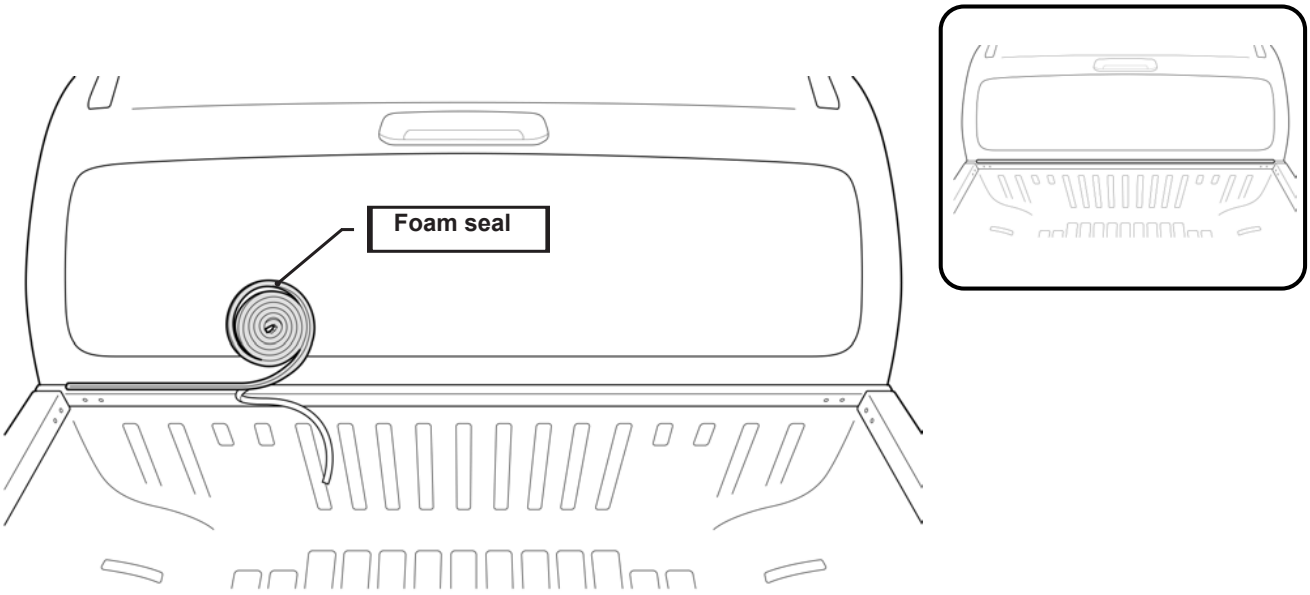

Install front drain pipes (55mm diameter end of hose) through pre-drilled holes on the front tub panel.

Note: With care push tube in.
Taking care pull the tube back so it seals correctly against the front panel of the tub.

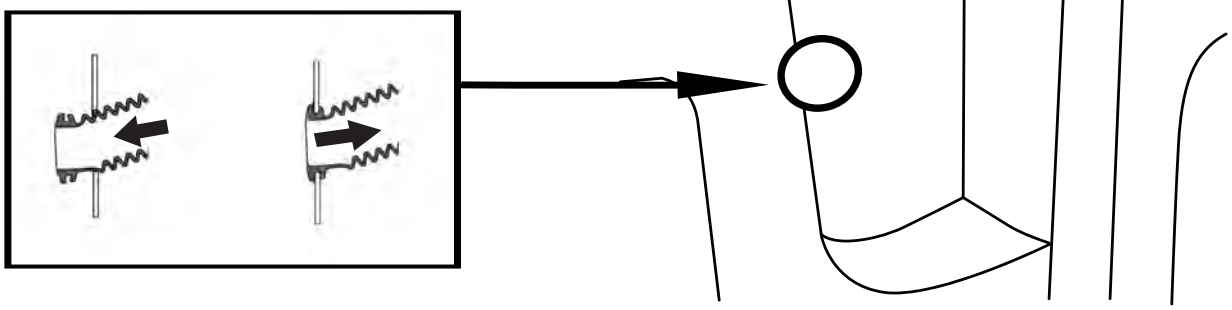

© Roll Я Cover

Disconnect fuse patch from battery loom S2.75.

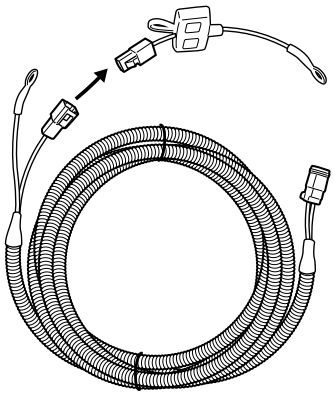

Wiring Harness steps

1 **Feed Battery Loom S2.75 through the cavity**

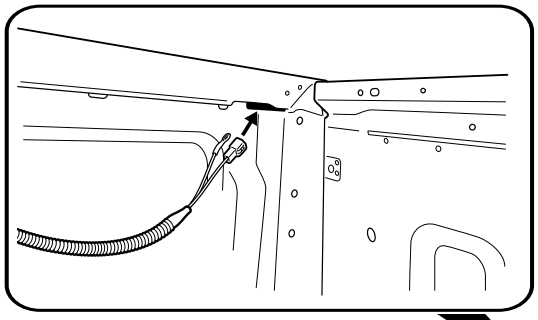

3

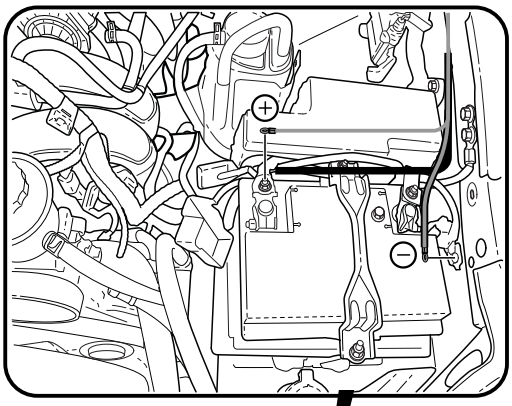

2

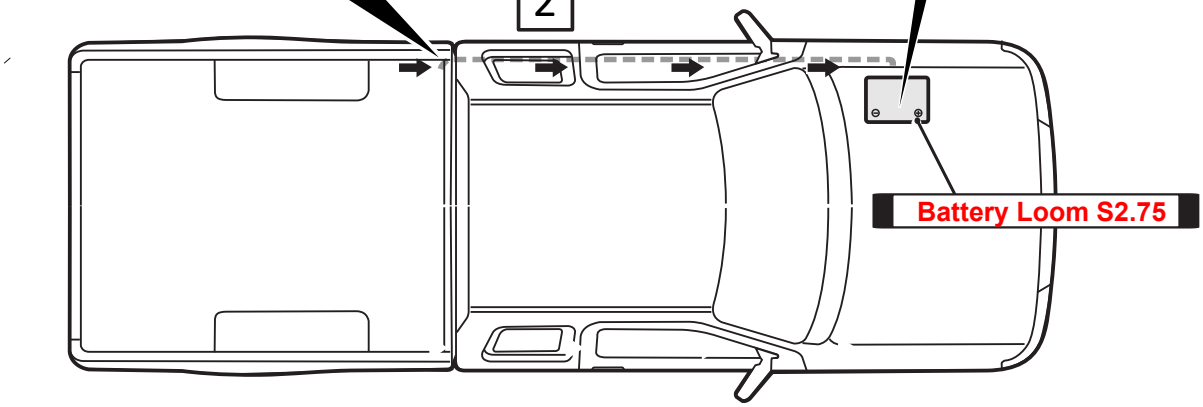

Run the wiring from the front corner cavity (leaving 200mm in the tub) to the battery over the chassis rail. Making sure to keep away from hot obstructions and cable tie every 400mm. Reconnect fuse patch to battery loom S2.75, now attach fuse patch to positive of battery and earth to the body of the Ute.

Feed CL-Short-Loom through the cavity.

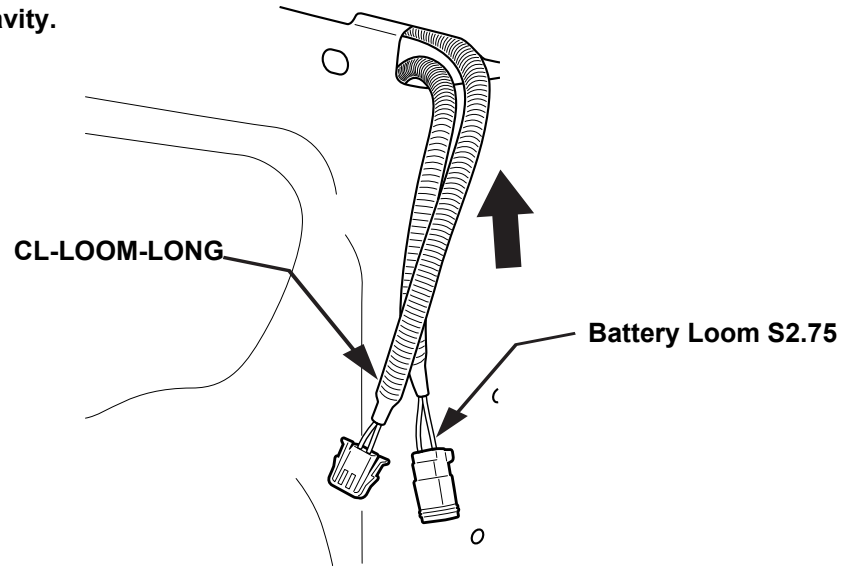

© Roll Я Cover

Run cl-loom-long to front passenger door over chassis rail. Cable tie wiring every 500mm.

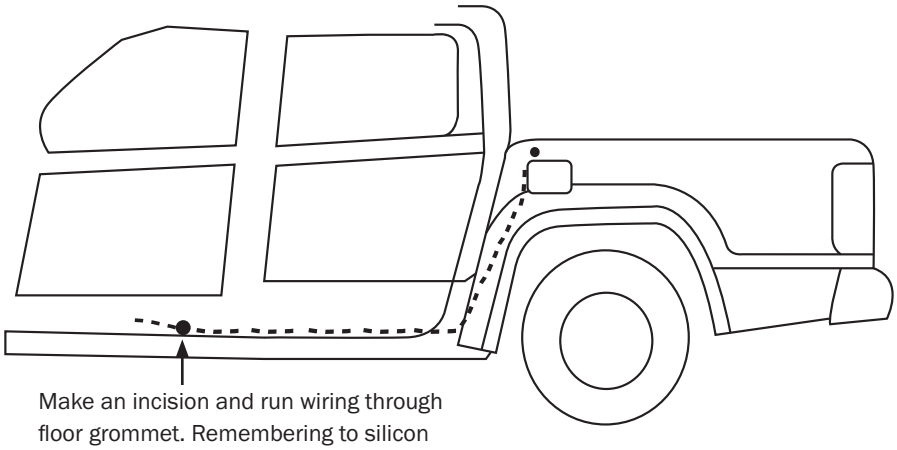

Make an incision and run wiring through floor grommet. Remembering to silicon when finished.

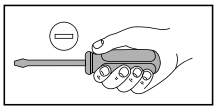

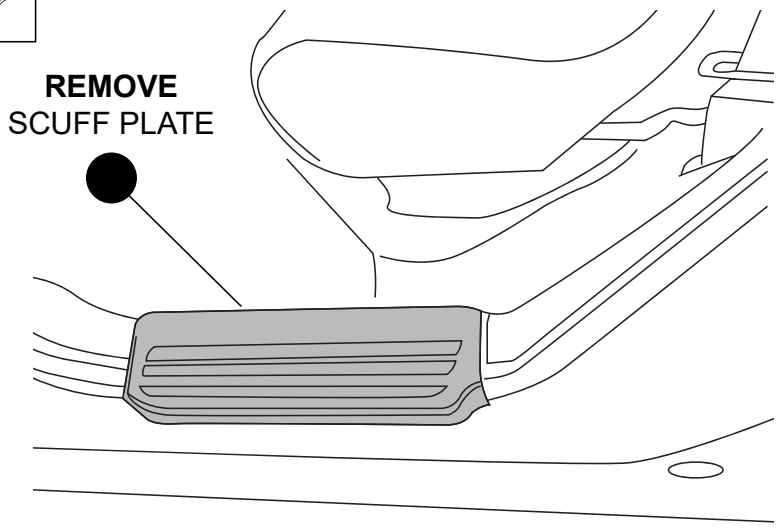

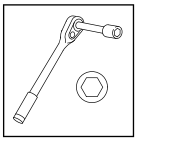

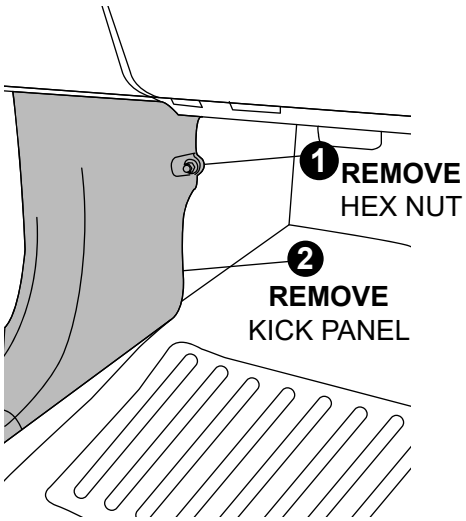

© Roll Я Cover

Feed the negative and positive wires of the C-patch-S3 through floor grommet, run into engine bay connect to battery. Remembering to silicon when finished.

C-patch-S3

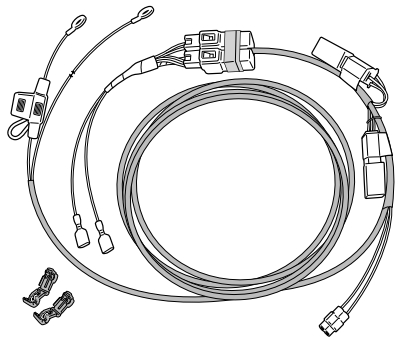

Passenger side

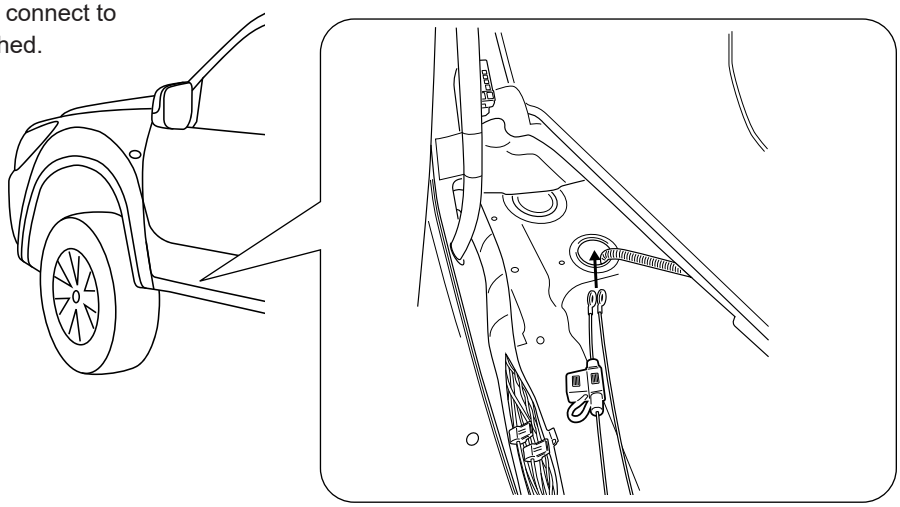

1. Locate conduit leading towards the rear passenger door under the scuff-plate/carpet.
2. Splice in to conduit to reveal all wiring.
3. Locate light gray wire and brown with yellow trace.
4. Attach T-tap terminal.

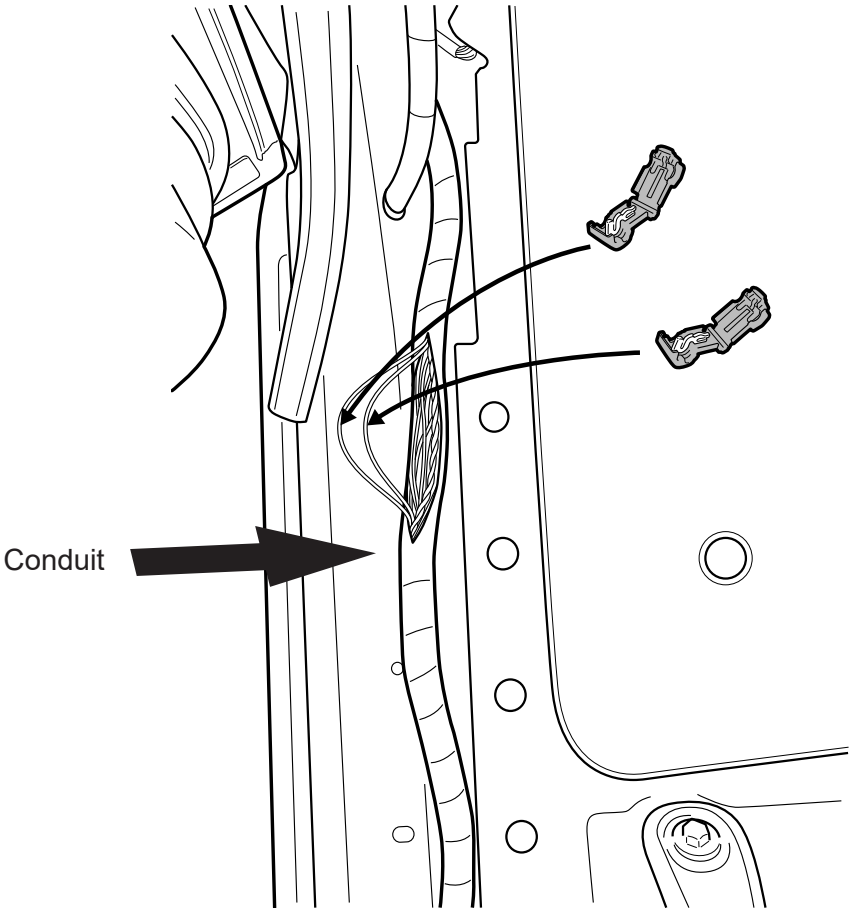

Connect C-patch-S3's brown with black trace to vehicle wire brown with yellow trace.
Connect C-patch-S3's yellow with black trace to vehicle wire gray color.

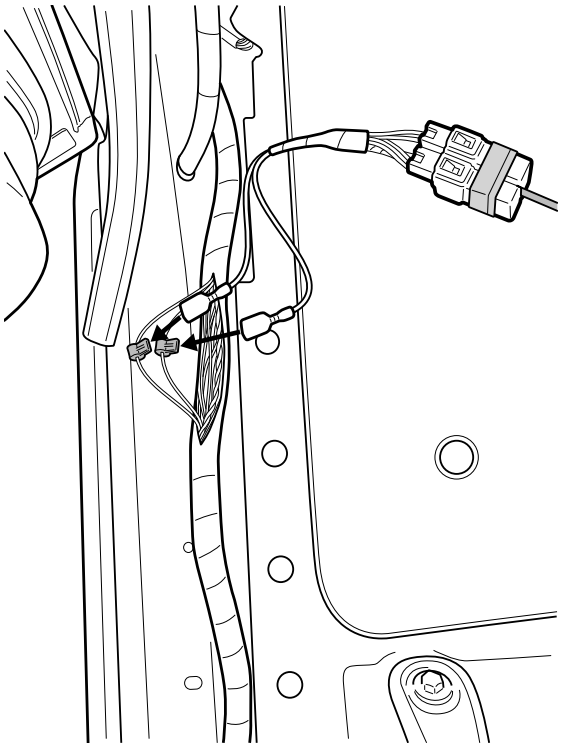

Connect Cl-Loom-long to C-patch-S3' 2 way connector.

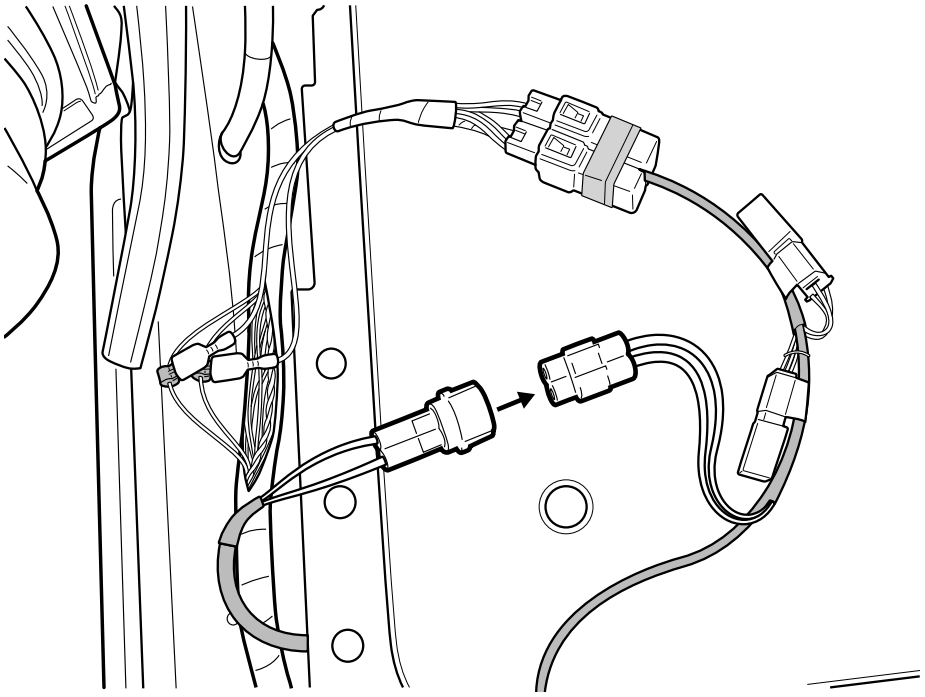

keep the cannister in the foam blocks from the packaging for assembly.

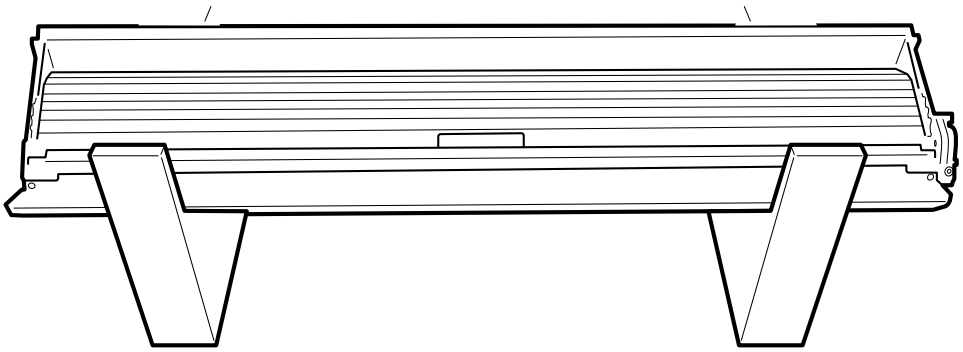

With assistance turn the canister on its back on the foam blocks.

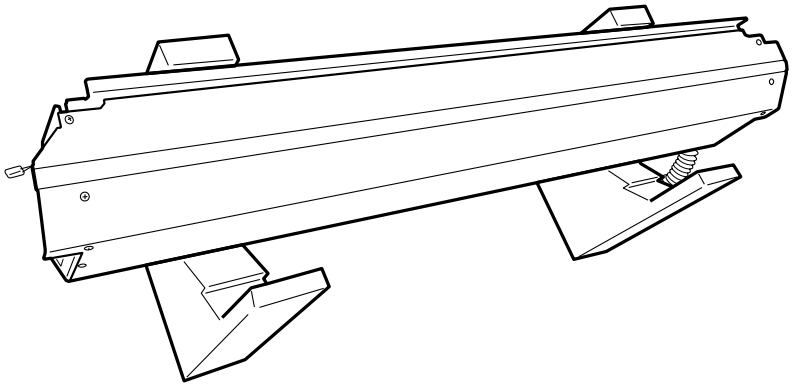

Disengage motor from the axle by unfastening the 3 Screw as indicated. Retain all parts.

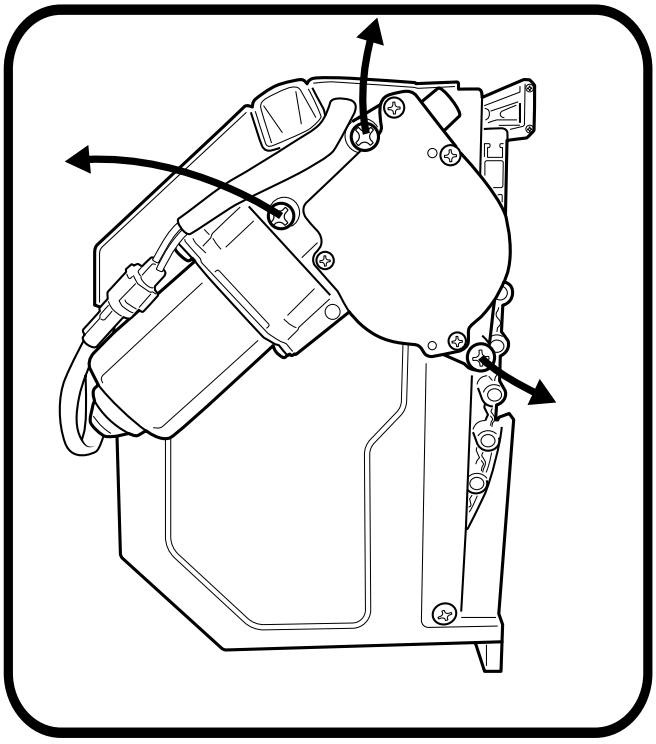

Remove and retain the 3 screw from the canister as indicated.

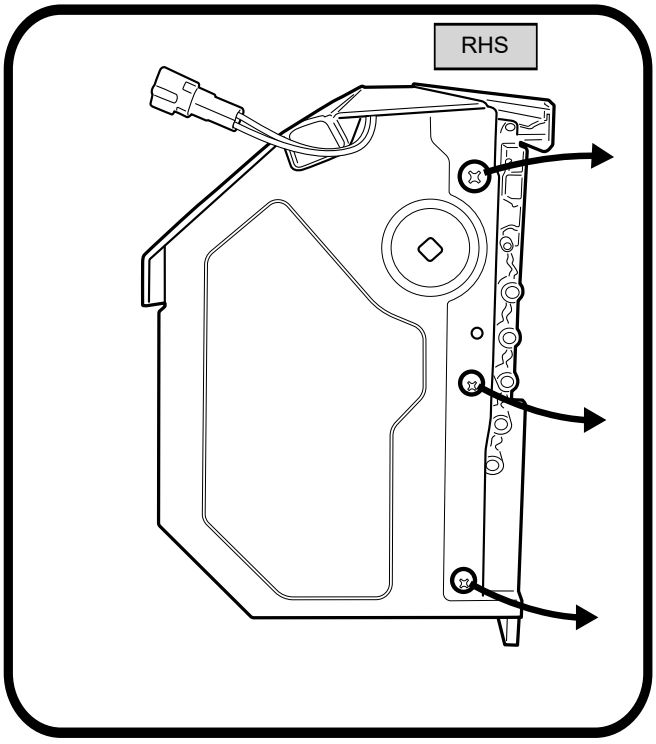

© Roll Я Cover

Now on the other side, remove and retain the 4 screws from the canister as indicated.

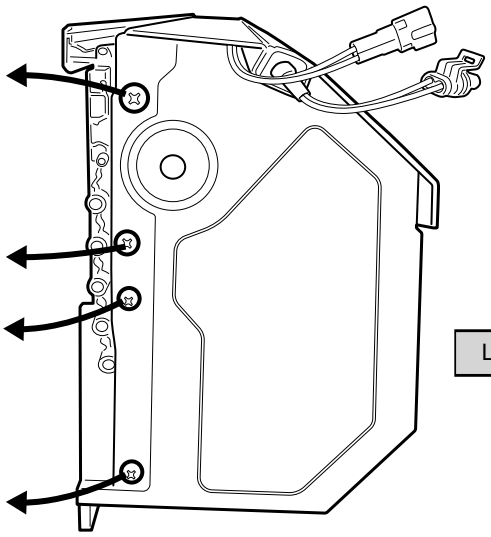

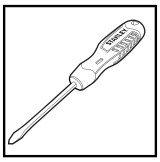

Align side rail to side of canister, guide the track to go in between the curtain end robber stop.

NOTE: LHS side rail to be assembled first.

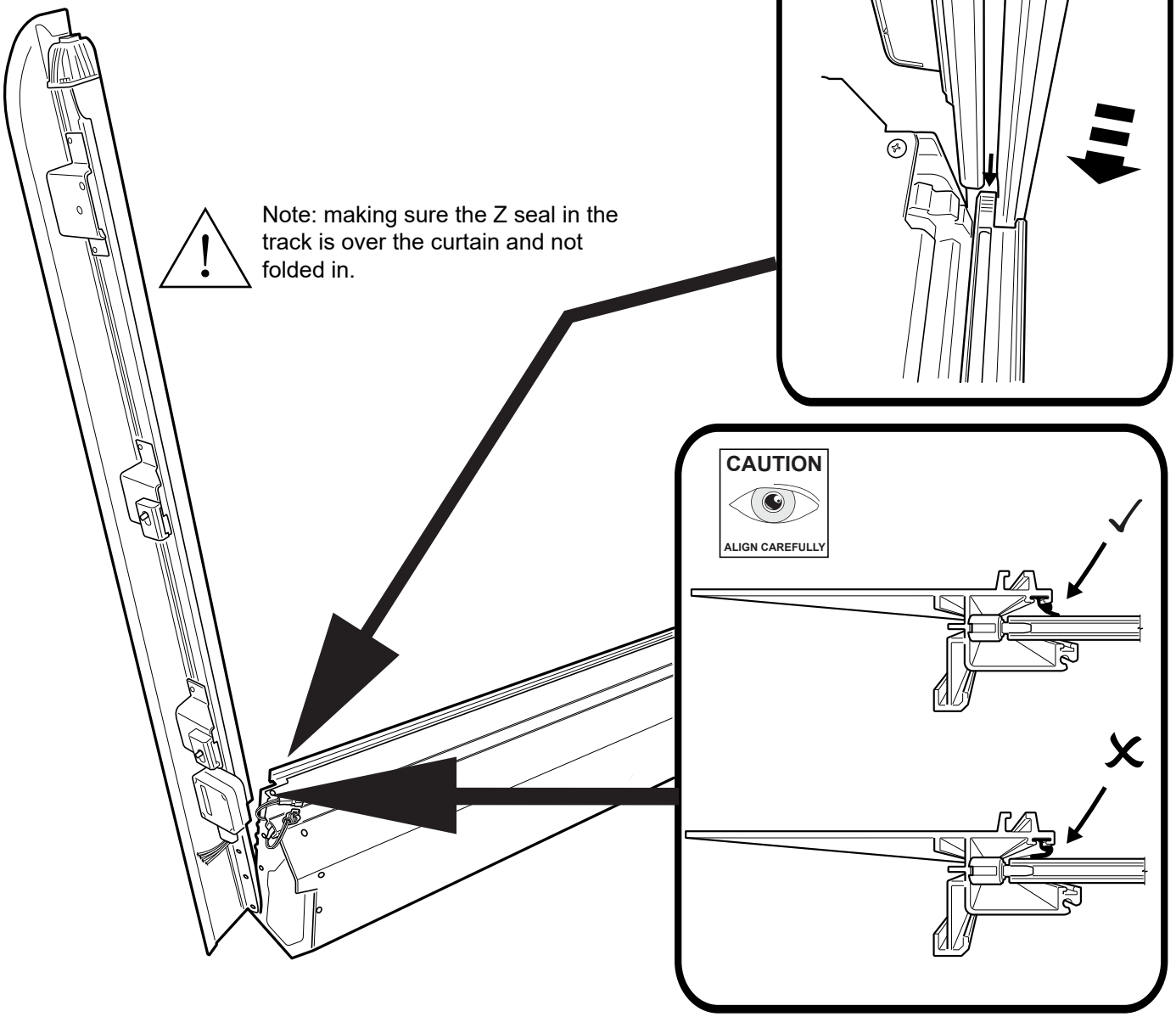

© Roll Я Cover

Fasten the side rail using the retained screws, spring washer and washer.

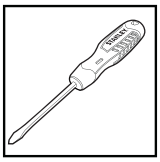

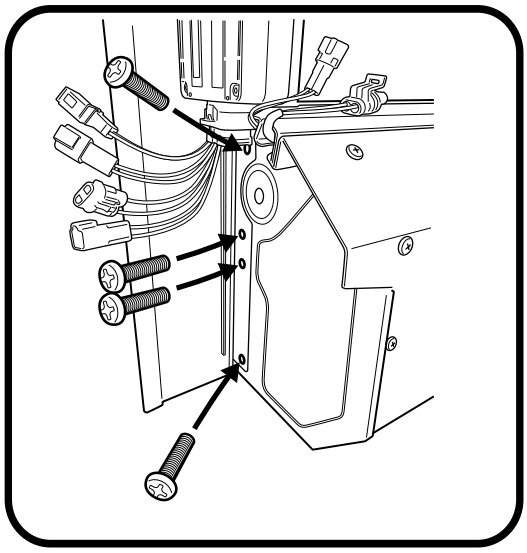

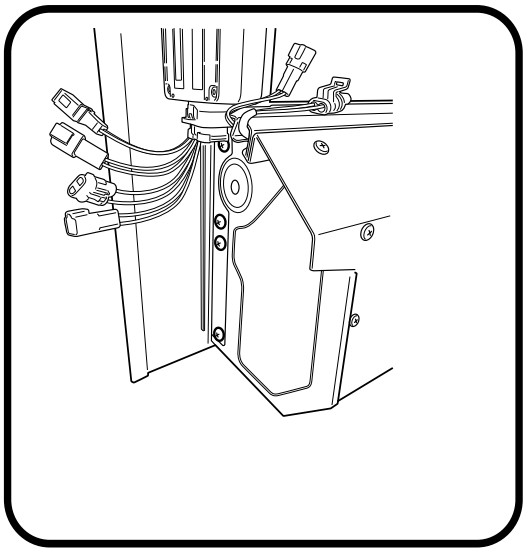

Connect motor connector to receiver

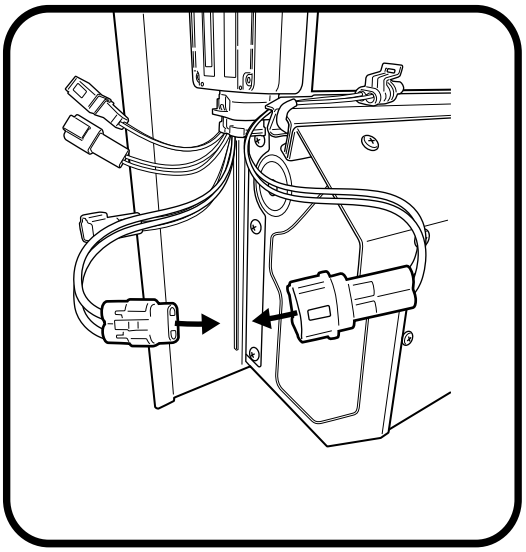

Connect LED Loom to receiver

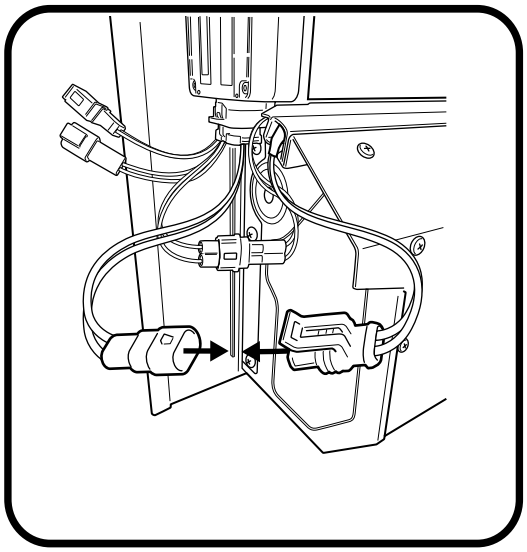

© Roll Я Cover

Align side rail to side of canister, guide the track to go in between the curtain end robber stop.

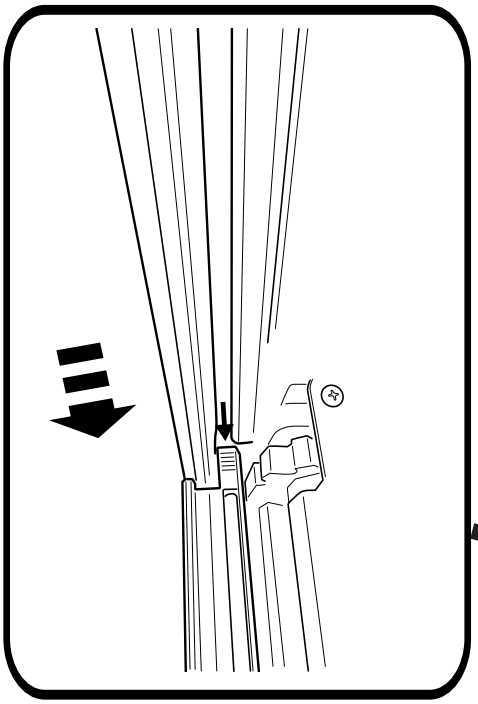

Note: making sure the Z seal in the track is over the curtain and not folded in.

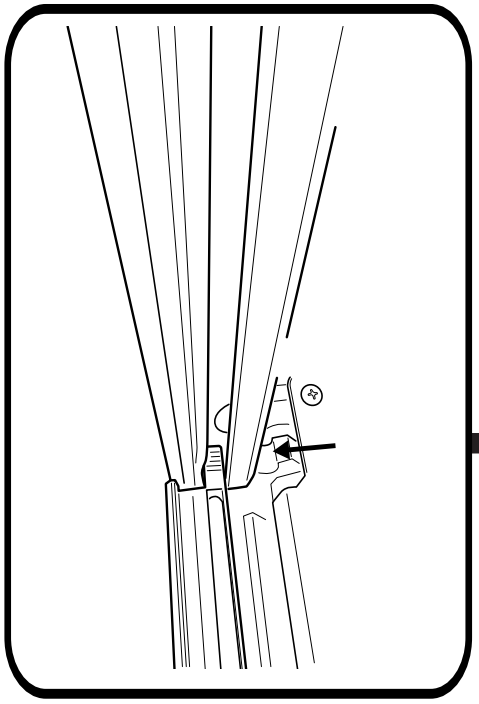

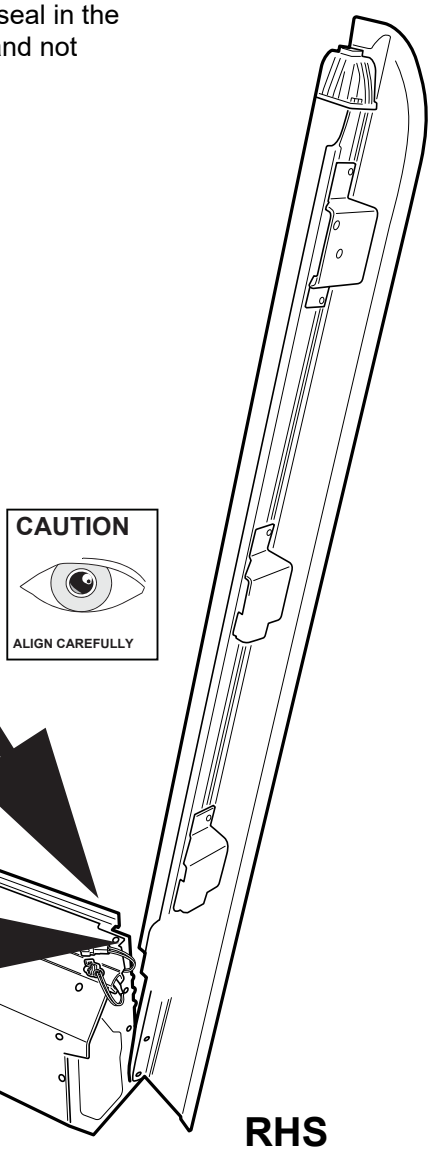

RHS

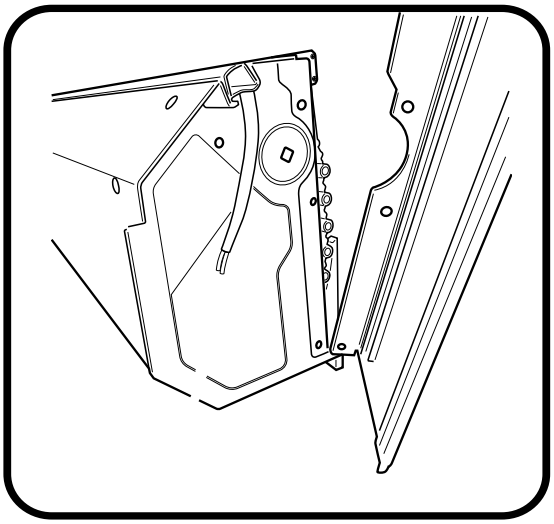

© Roll Я Cover

Fasten the side rail using the retained screws, spring washer and washer, only to the locations indicated.

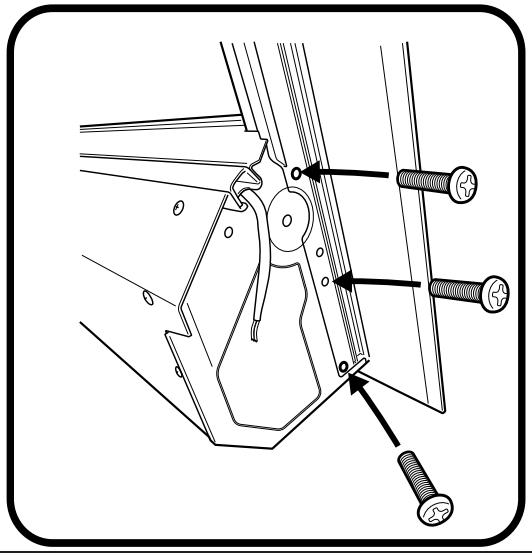

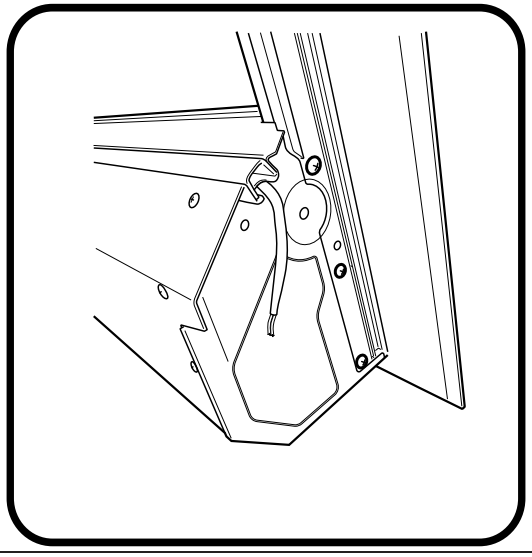

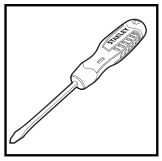

Feed M6 bolt through spring washer, motor and rubber bush.
NOTE: Rubber bush orientation has to be as per image. (side with text on rubber, to face the motor).

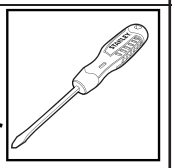

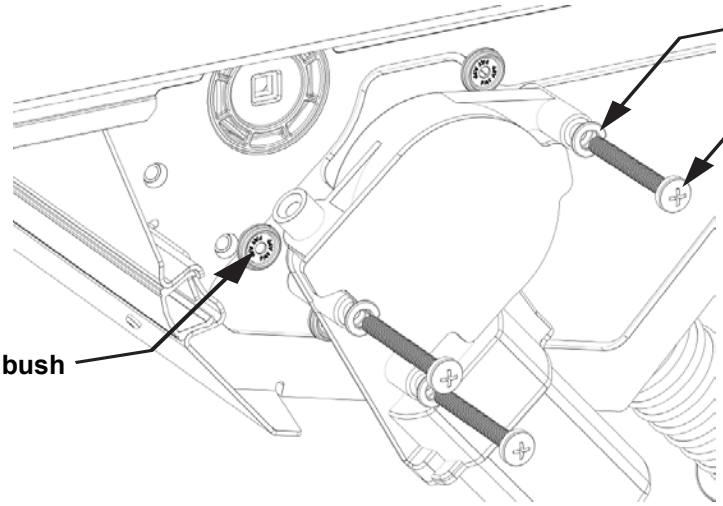

Align & insert motor shaft to axle.
NOTE: Pull / push curtain for axle to rotate.

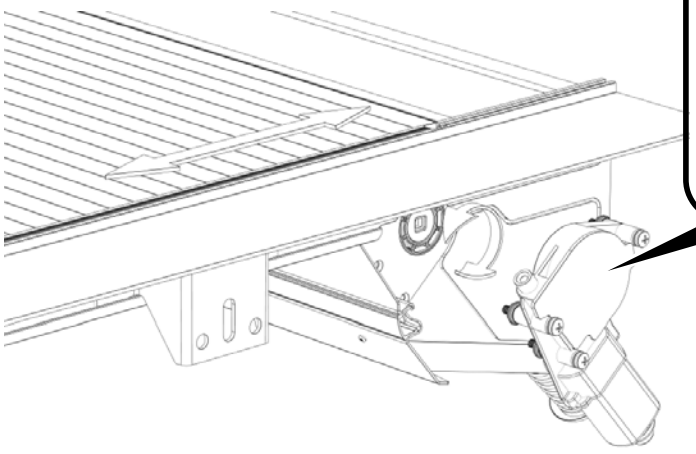

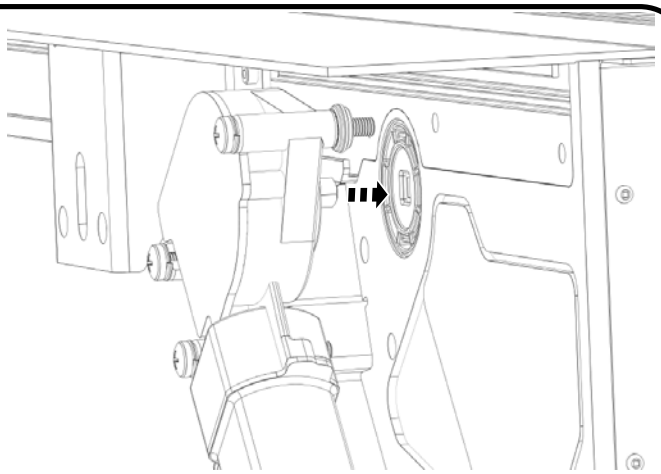

Motor Shaft must line up accordingly to axle.

© Roll Я Cover

Fasten all 3 screws to 2nm torque. Over tensioning will cause operating issue's.

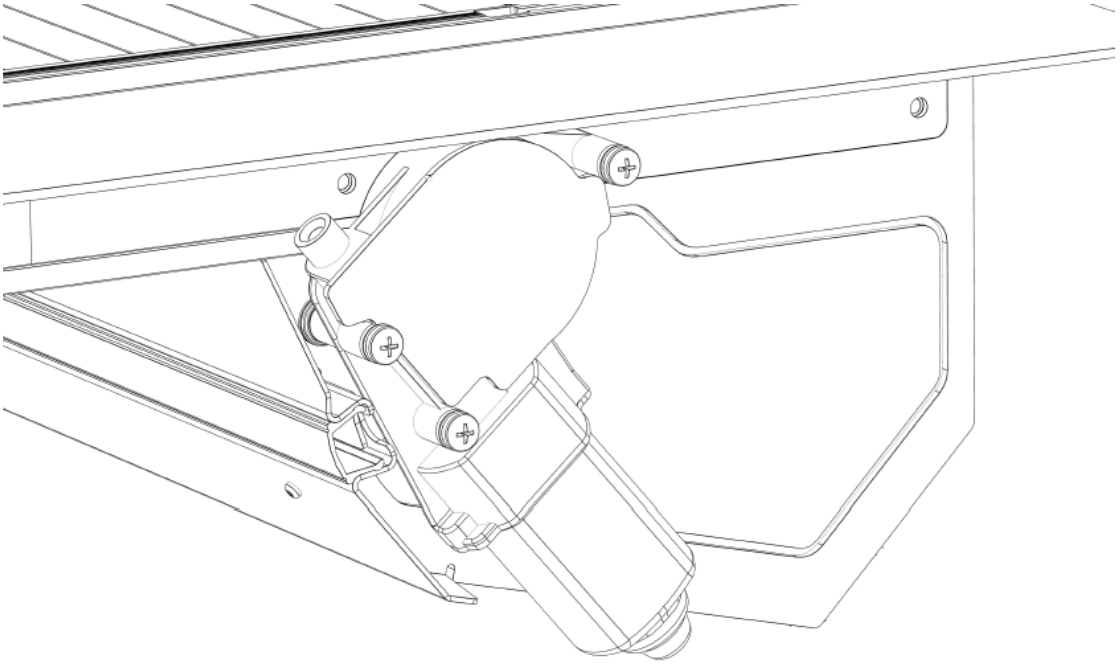

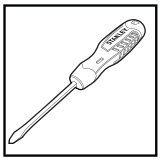

Motor is to sit level.
Any obstructions between motor and canister may cause operating issues.

Apply D-sponge foam tape to side rail as indicated. NOTE: Join foam firmly to the per-fitted foam of the canister. Carefully trim excess off & discard as indicated. Repeat on the other side.

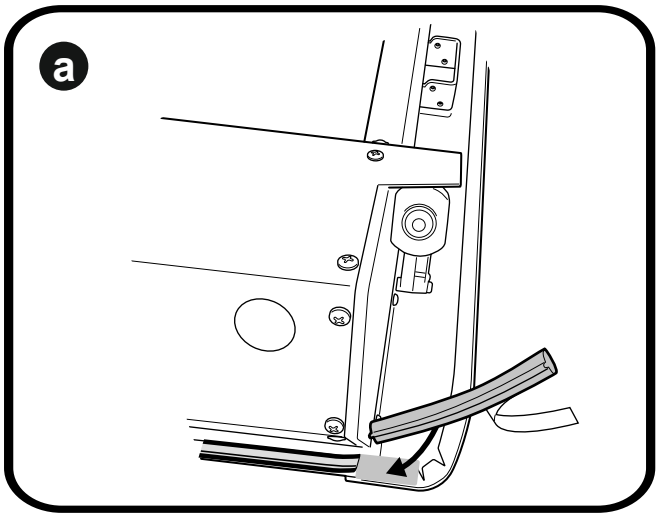

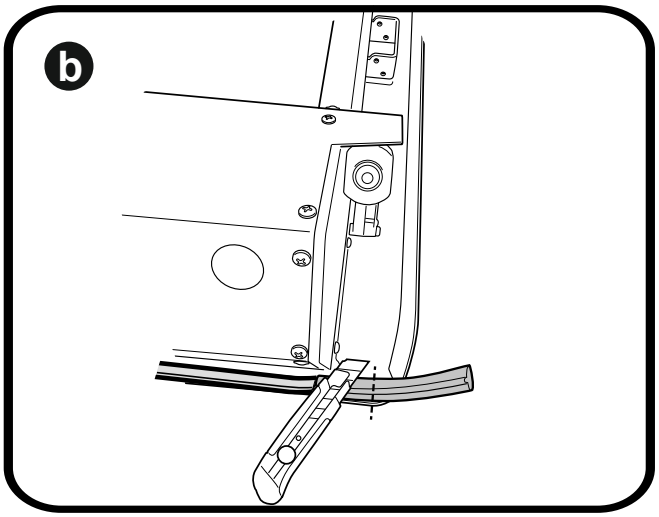

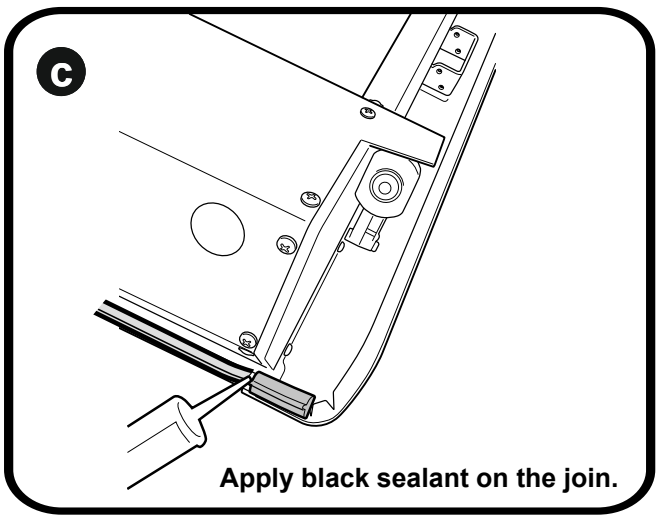

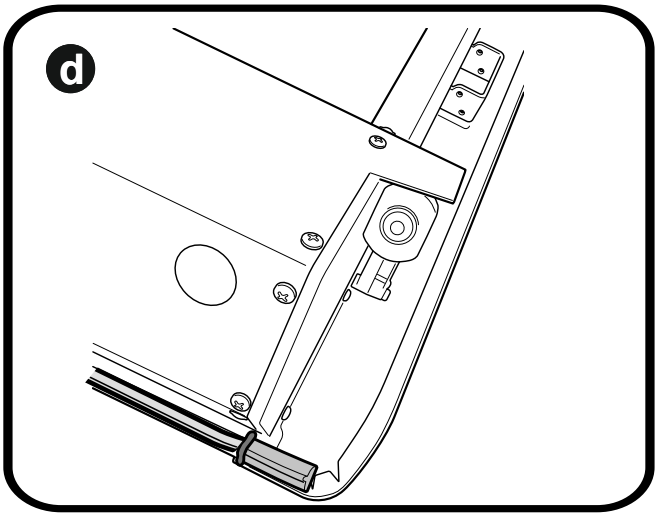

© Roll Я Cover

Carefully bring down the assembled unit.

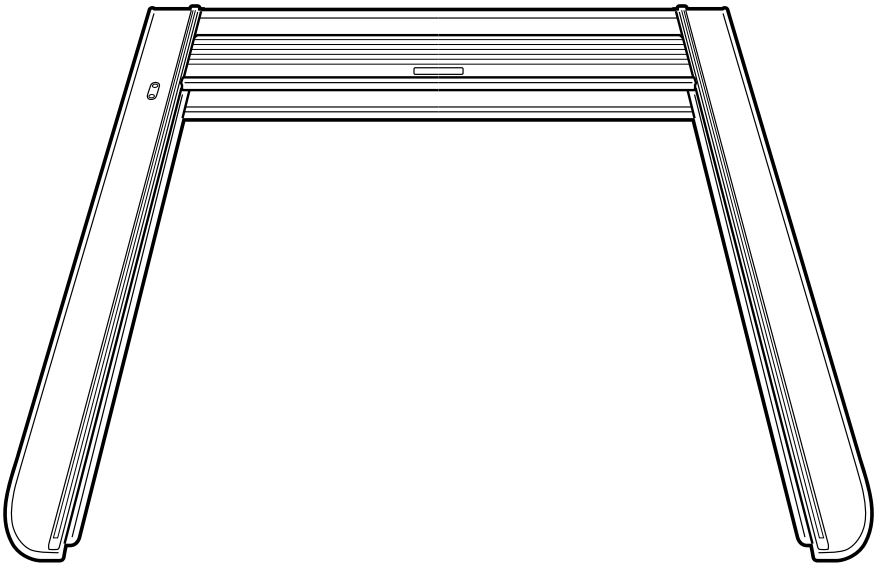

Insert side end caps to the top cover.

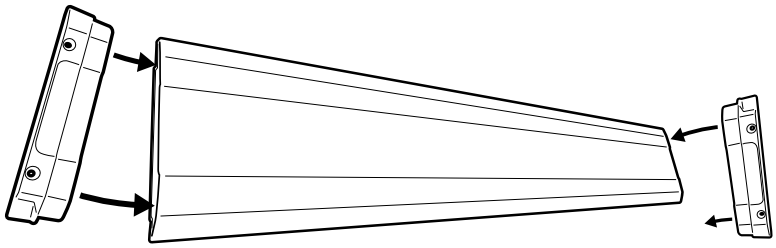

Place & Align top cover over the canister and side rails.

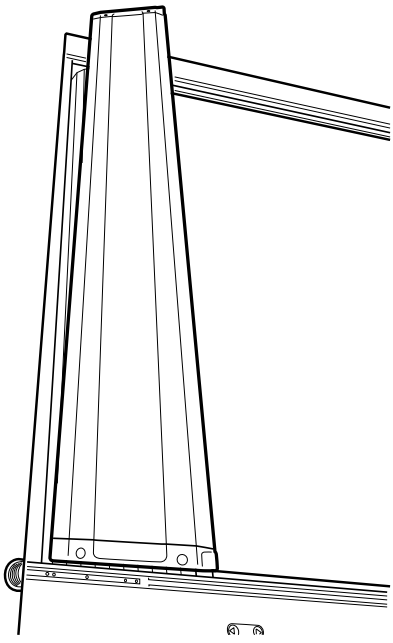

Using countersunk screws provided, line up end cap holes to the threads on the side rail.
Fasten to 3nm torque. Repeat to the other side.

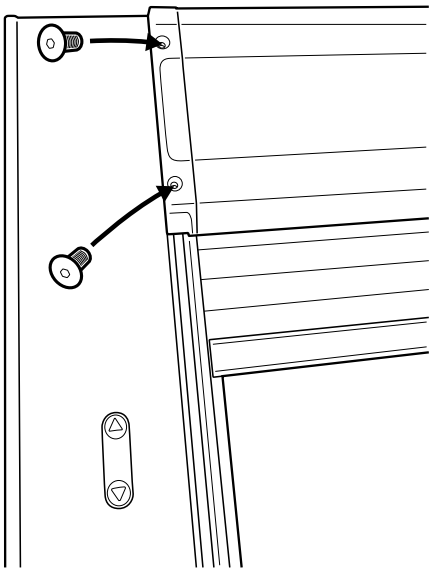

© Roll Я Cover

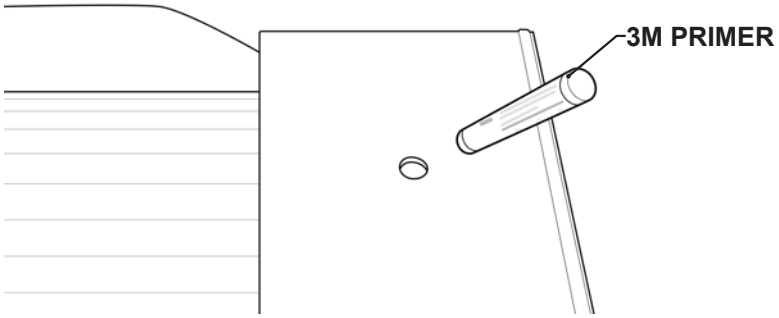

Apply 3M primer provided around side rail holes.

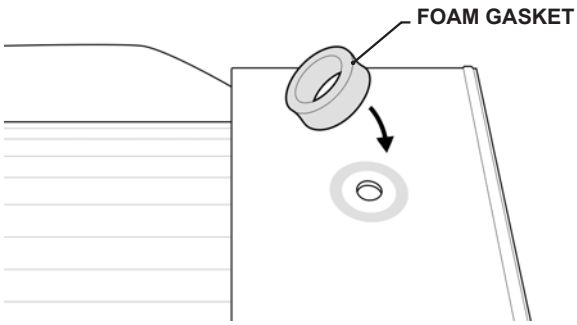

Peal away backing from foam sealant and stick to side rail. Front and rear gaskets are not identical.

Repeat on all holes.

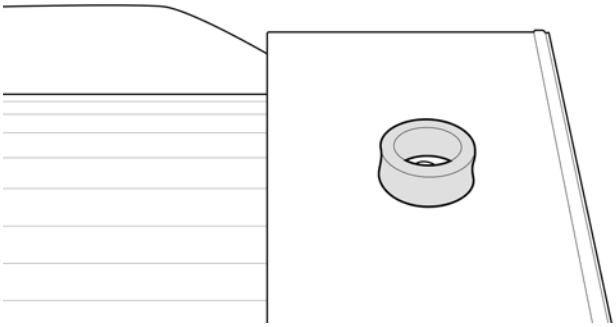

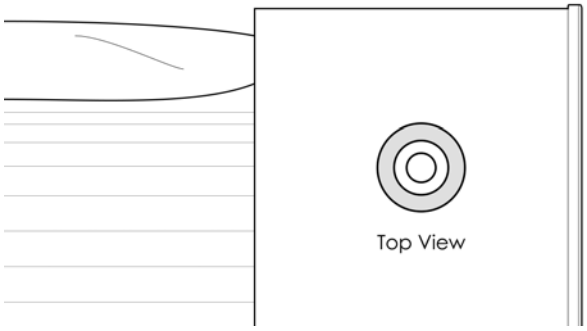

Remove all factory brackets from sports bars. Repeat on all six legs.

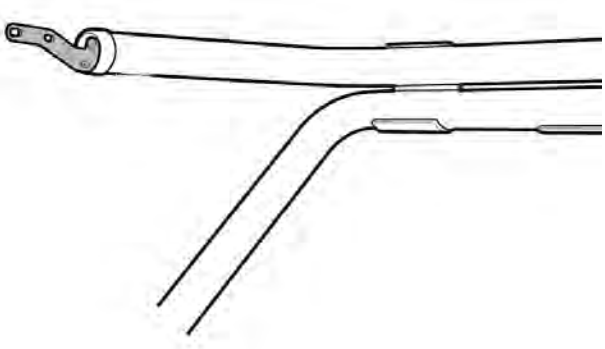

Remove center leg feet cups and apply silicon or adhesive to the inside of the cup.

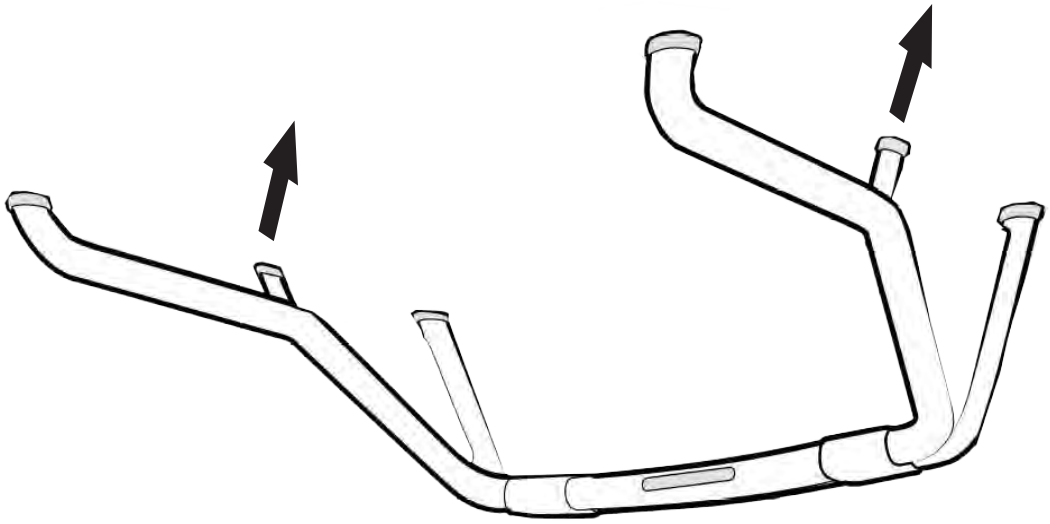

Re-fit cups to the center legs.

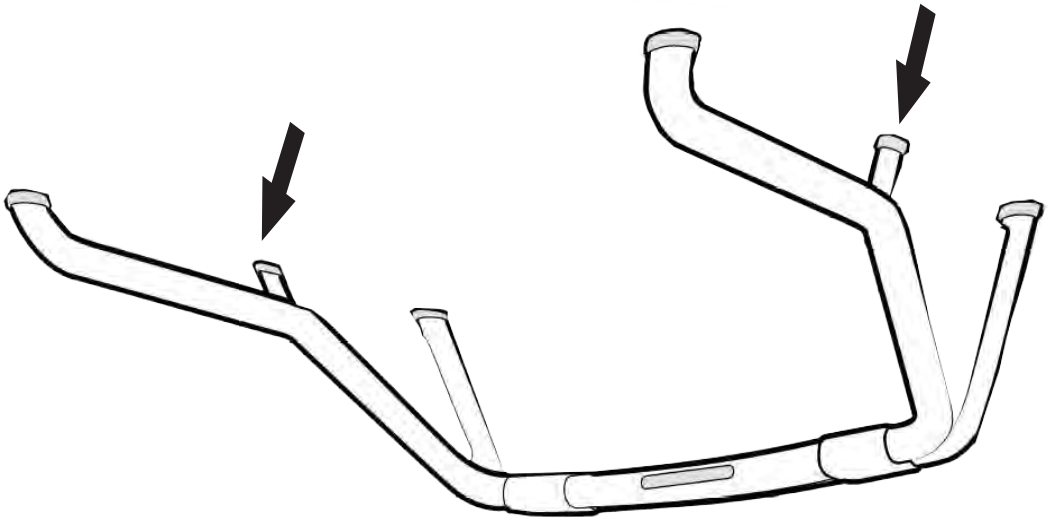

Fit Sports bar brackets using factory bolts

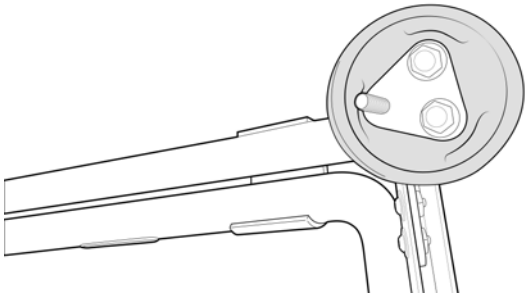

Note - Left hand rear bracket has provision for brake light wire.

Remove plug from connector.

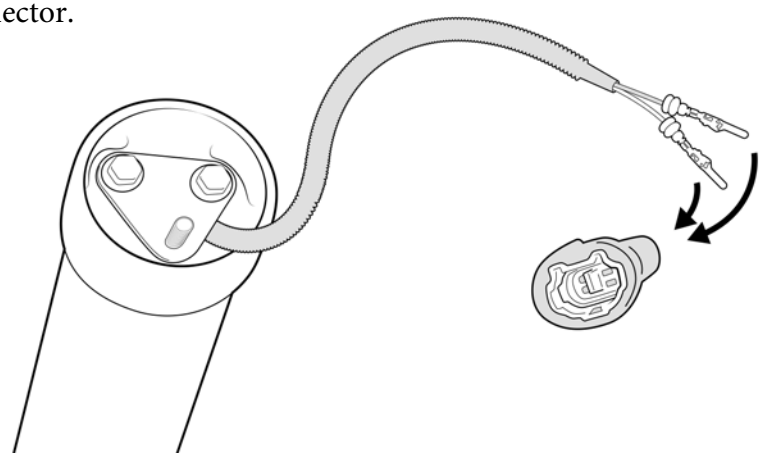

Place Sportsbar on Roll R cover

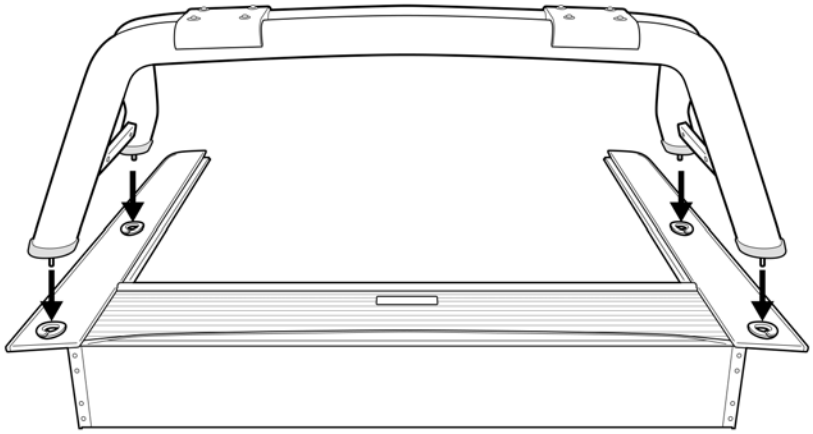

Place flat washer and tighten with the nylock nut provided. Repeat on all four legs.

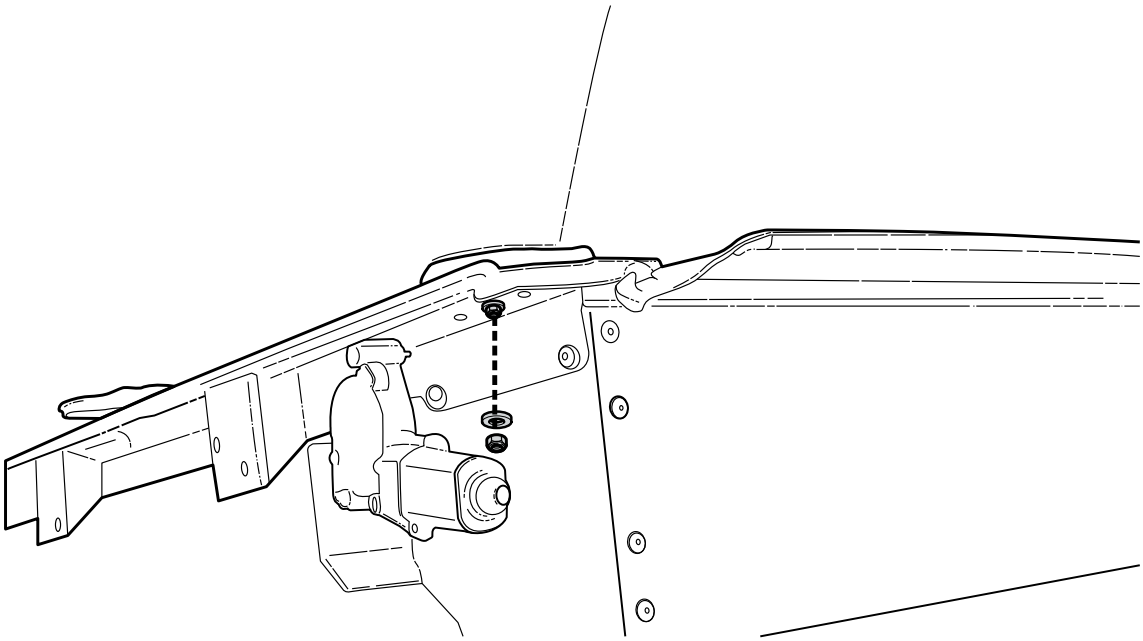

Note - Do not overtighten

Connect plug to connector.

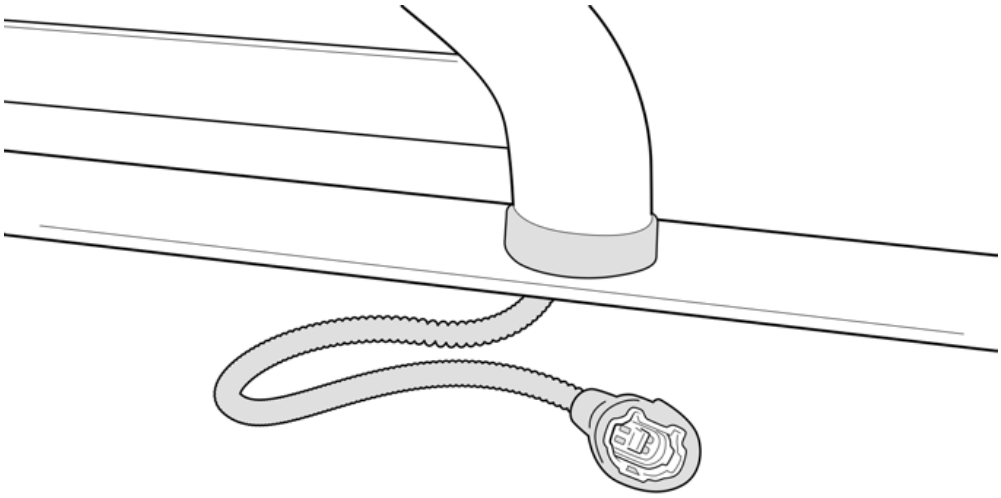

Seal any exposed gaps or holes on the front panel of the Ute bed with sealant.

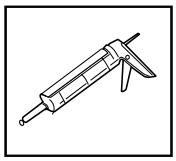

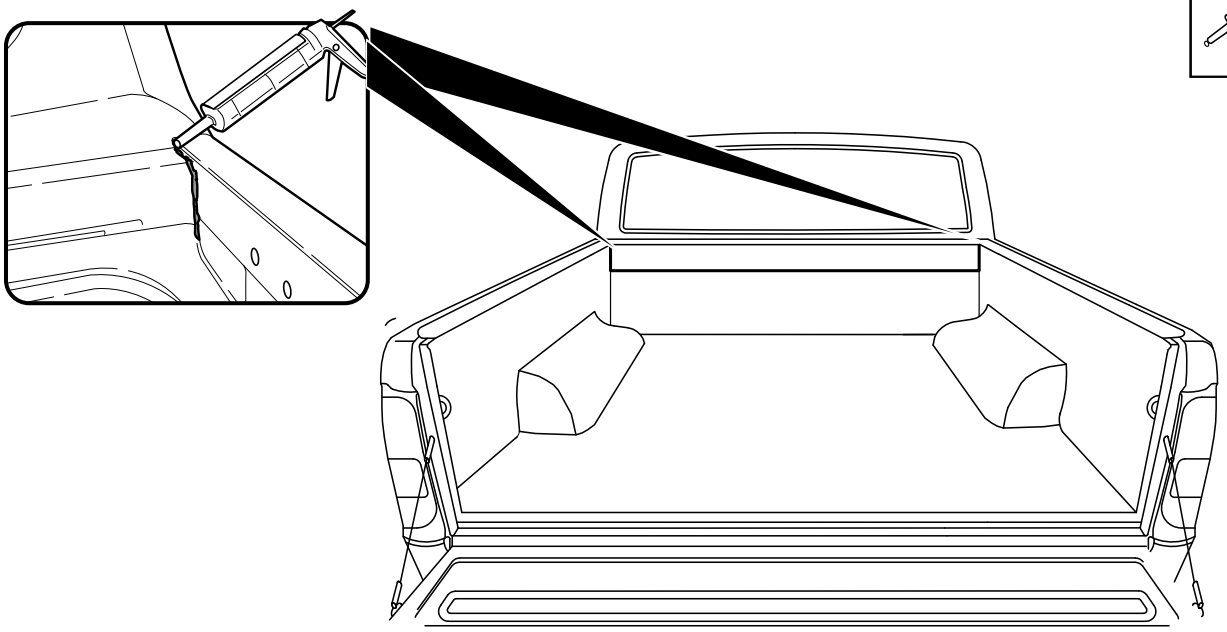

Place the Roll-R-Cover unit on to Ute bed.

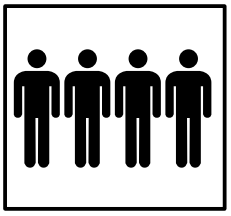

4 People
Recommended for lift

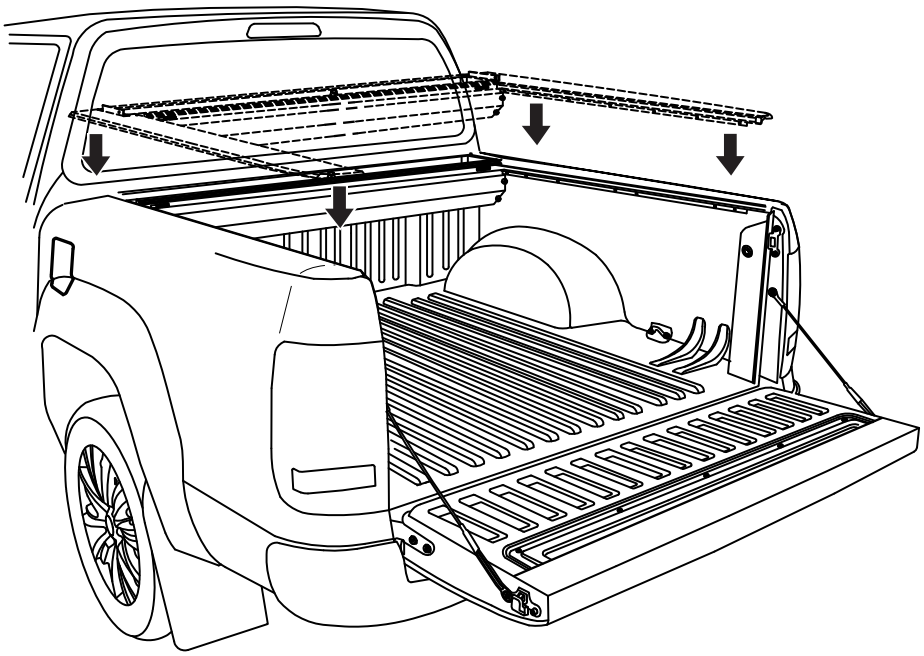

© Roll Я Cover

With care, pull out any side rubber that has folded under the side rail.

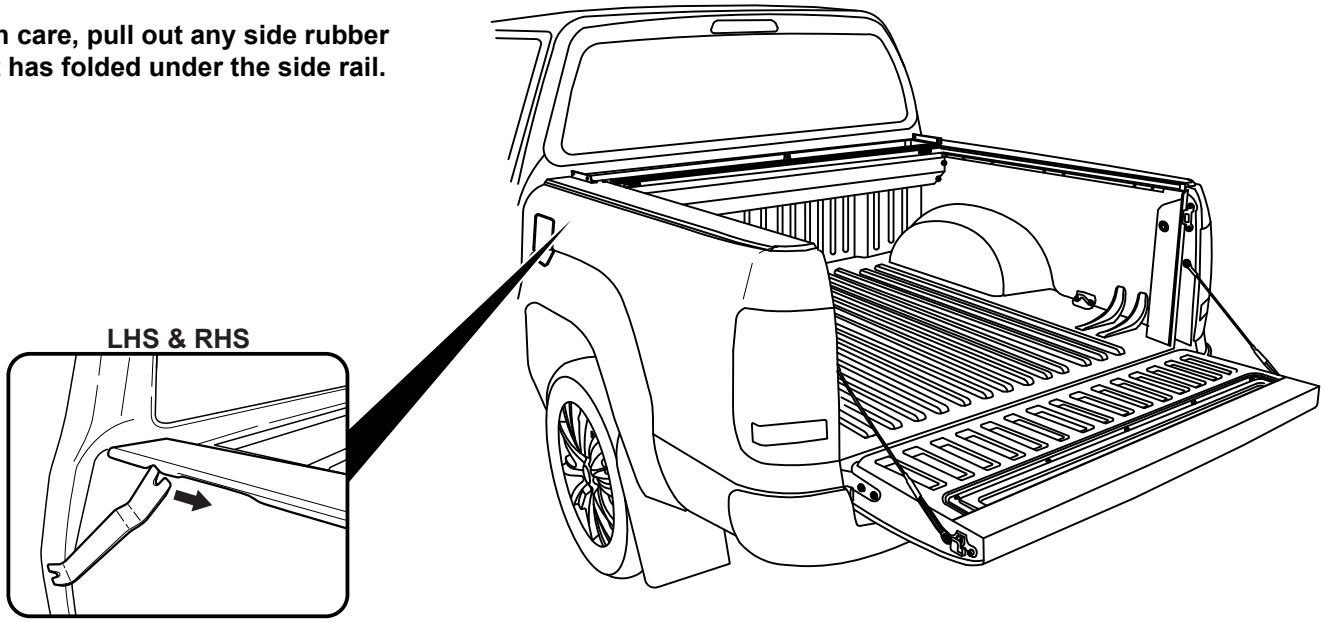

With the tailgate up (Closed position), Pull left & right hand side rails towards the tailgate, stopping short by 5mm between tailgate and side-rail endcap.

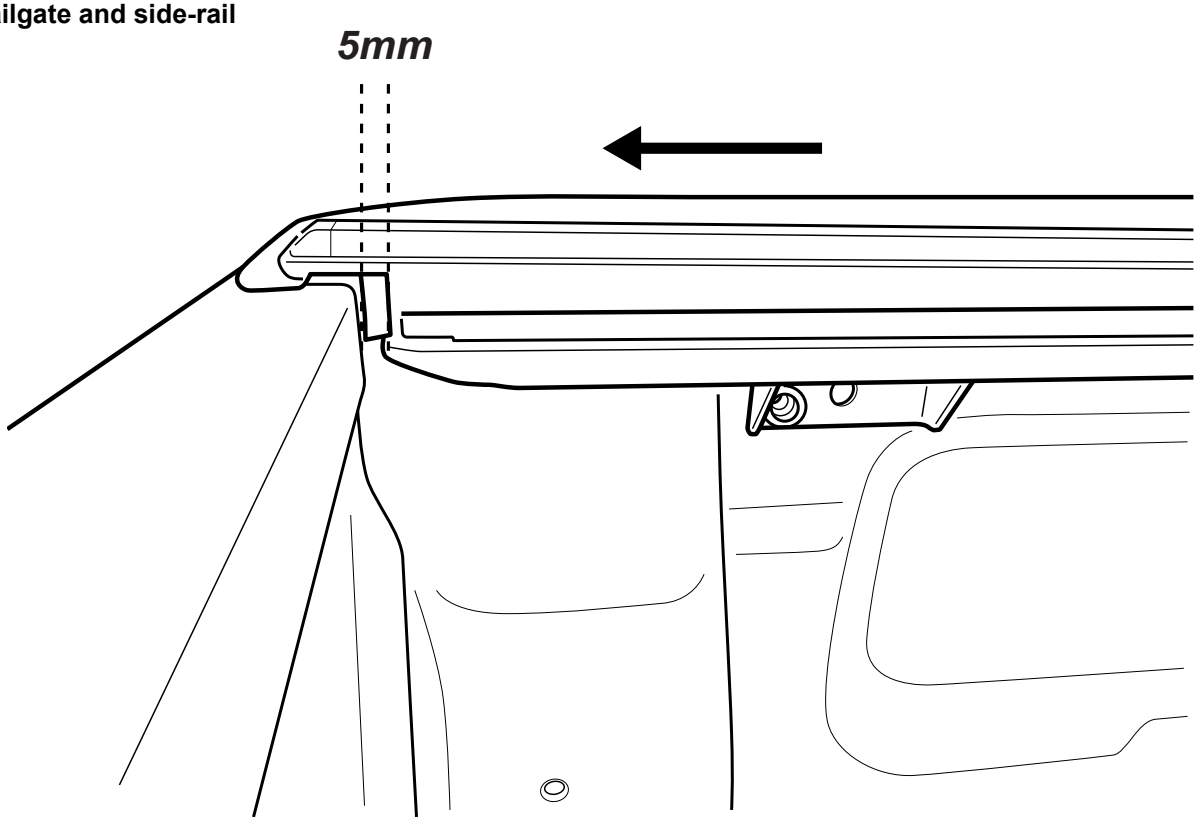

Foam compressed to 5mm when tailgate is closed.

© Roll Я Cover

Gap between tailgate and side-rail end cap to be 5mm.

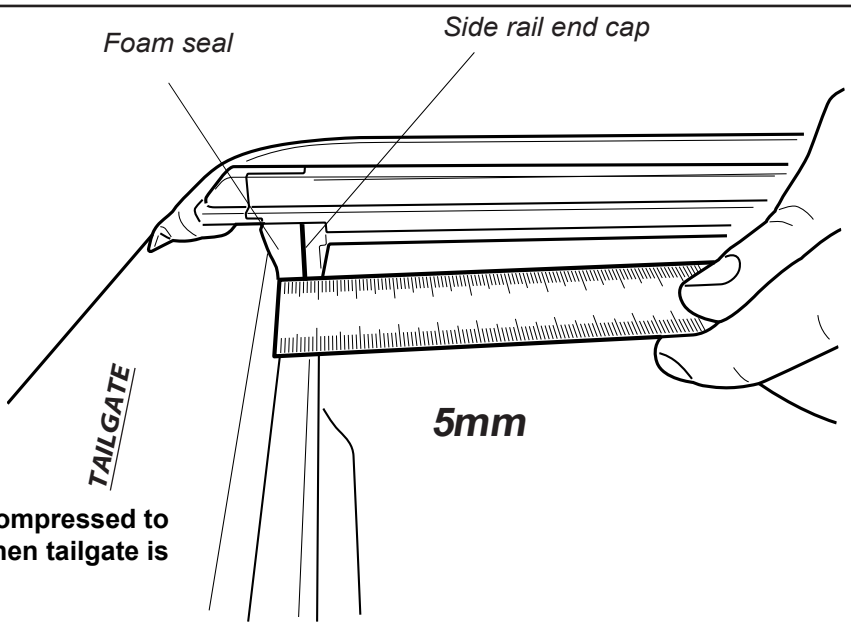

Foam compressed to 5mm when tailgate is closed.

Position clamp behind the inner top lip of the bed rail and the center elongated hole of the side rail mounting brackets. Repeat to all 6 positions.

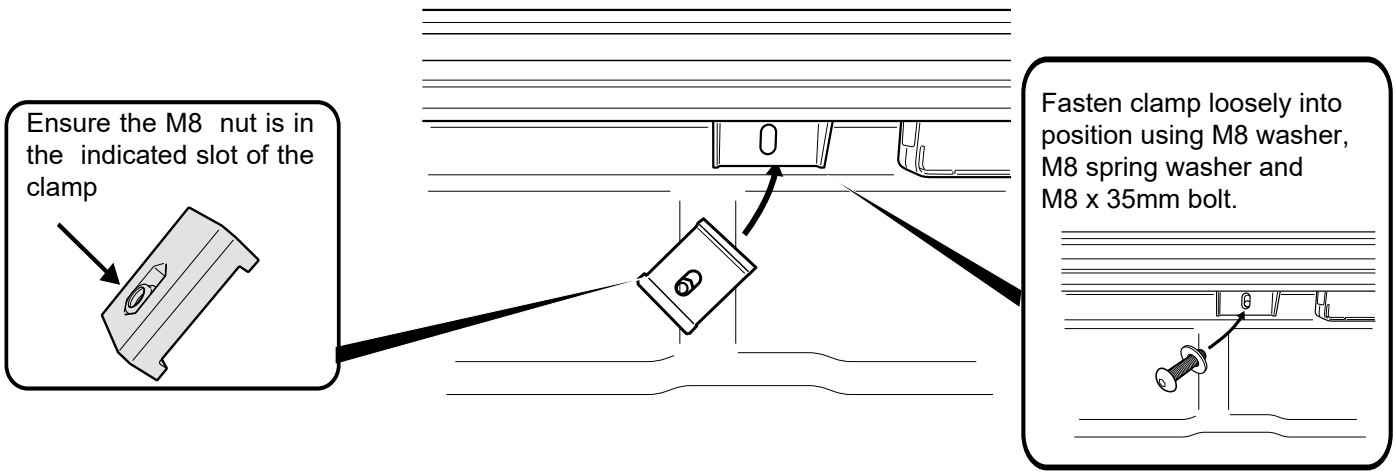

Apply pressure then tighten clamps in the order indicated.

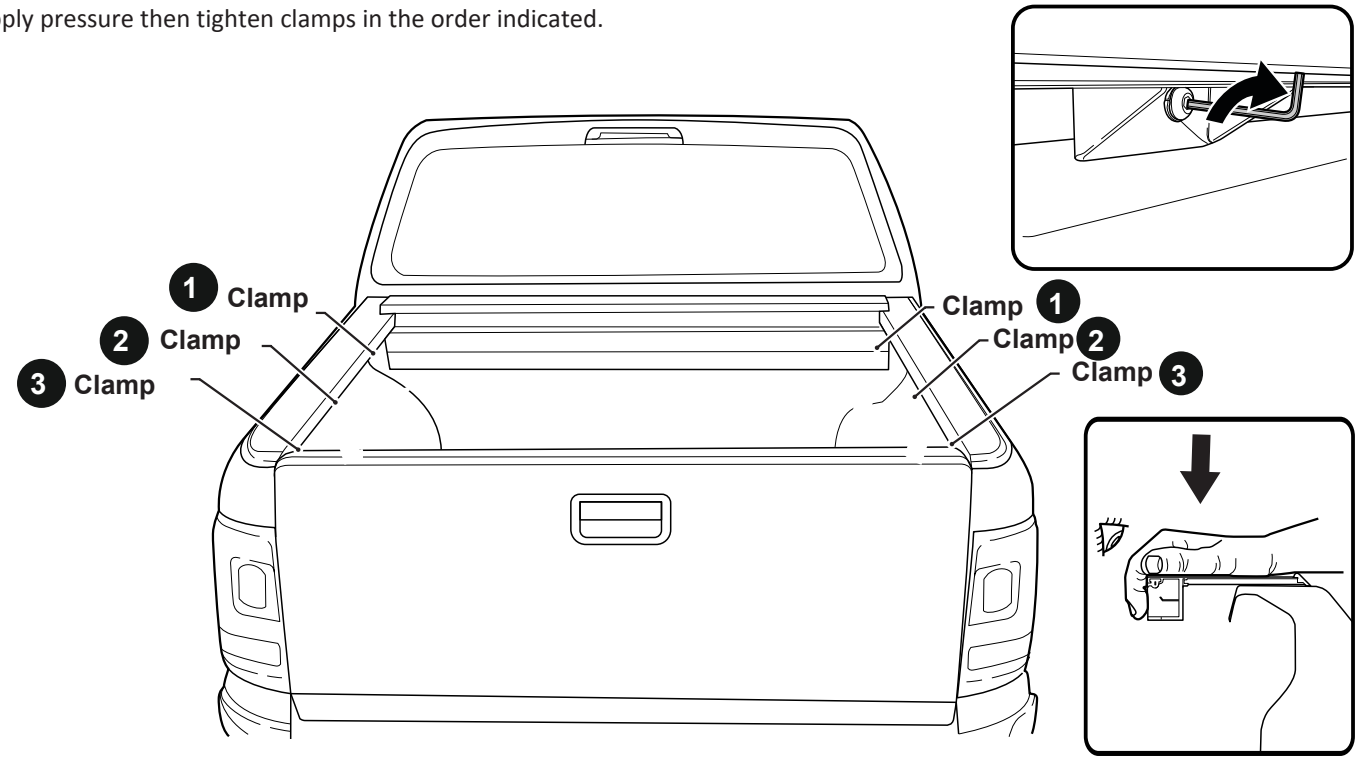

© Roll Я Cover

Apply flat plate behind adjusting bolt hole to the ute bed panel or to the liner if the Ute is equipped with a tub liner.

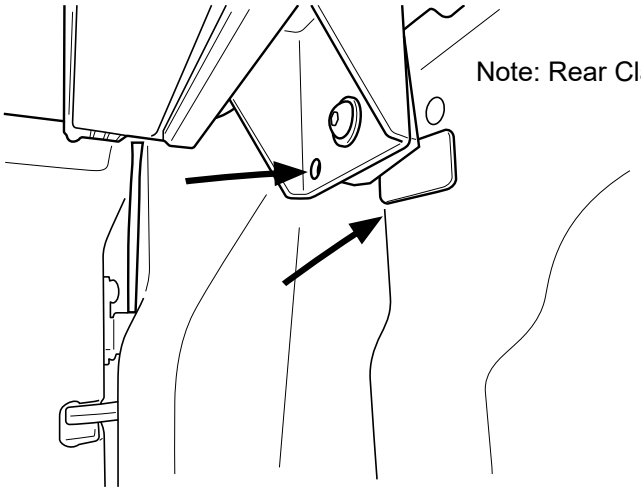

Note: Rear Clamp bracket.

Note: Clean surface before applying flat plate.

Feed M8 nut into M8x70mm bolt and through clamp bracket's pre-installed nutsurt as indicated.

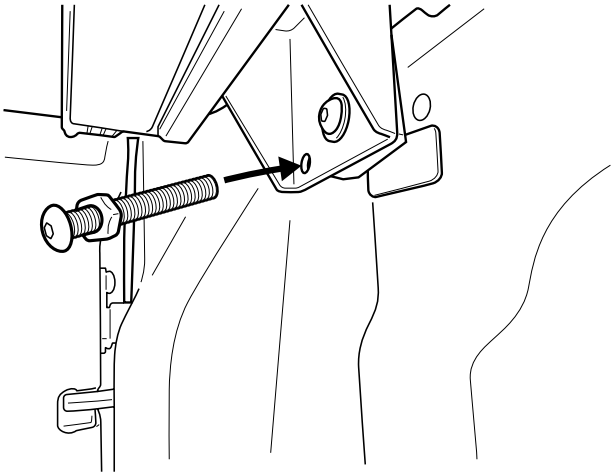

Side rail rubber must have a 1mm gap from the top of the tailgate in the closed position.

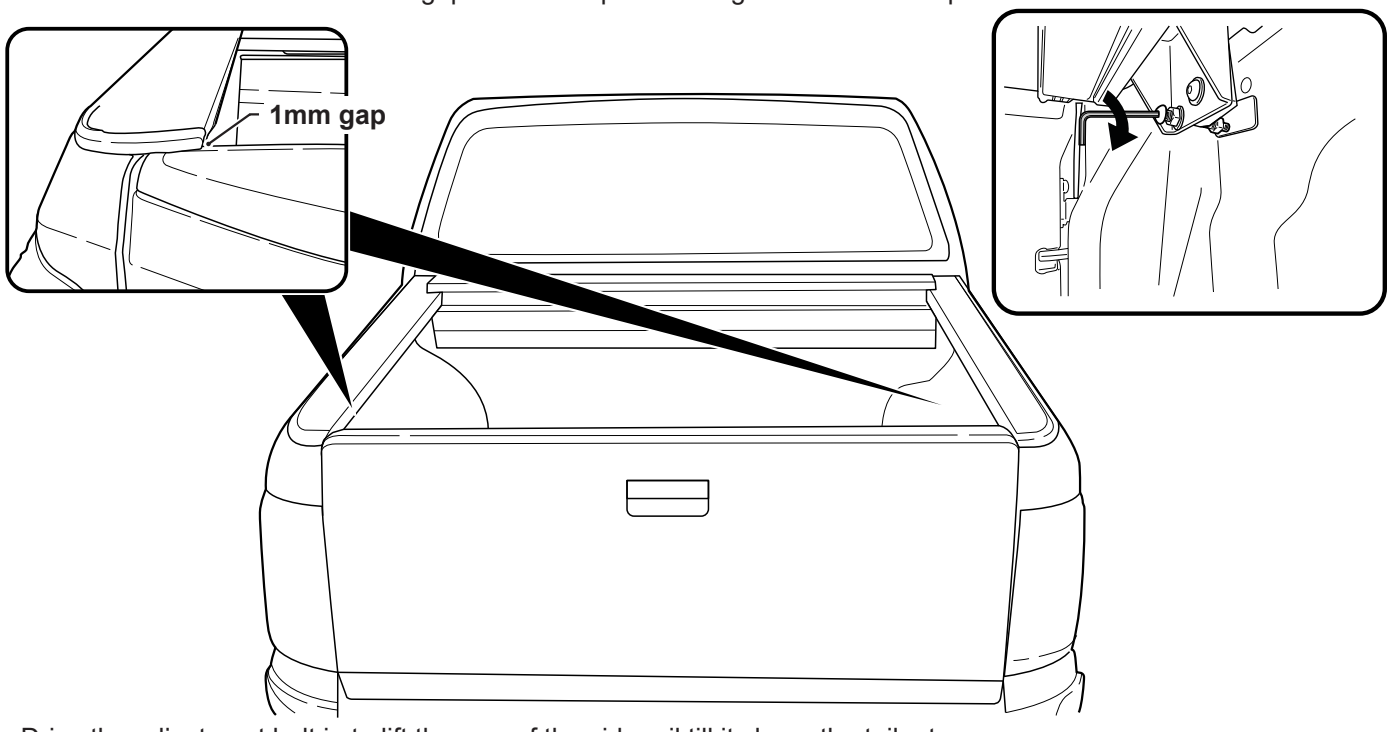

Drive the adjustment bolt in to lift the rear of the side rail till it clears the tailgate.

© Roll Я Cover

Fasten the M8 nut against clamp bracket.

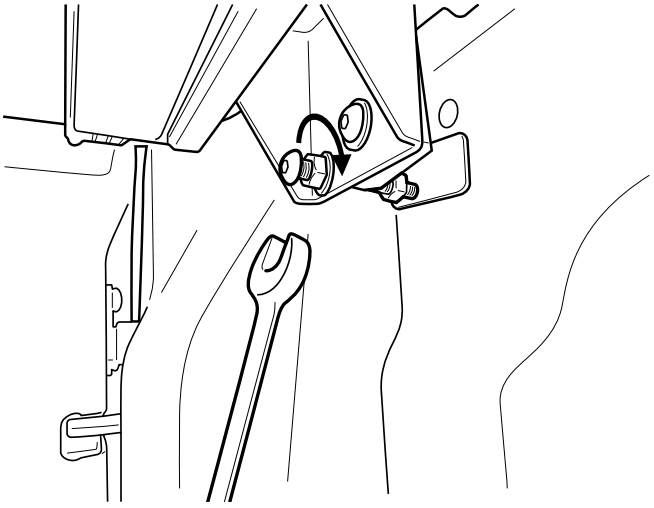

Install front drain pipes through pre-drilled holes of the canister. (RHS/LHS)

Note: With care push tube in. Taking care pull the tube back so it seals correctly against the front panel of the tub.

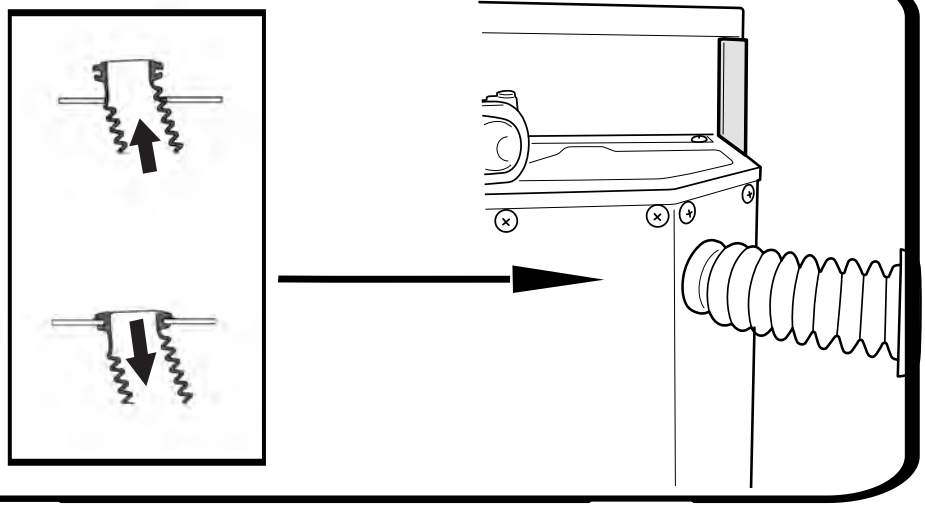

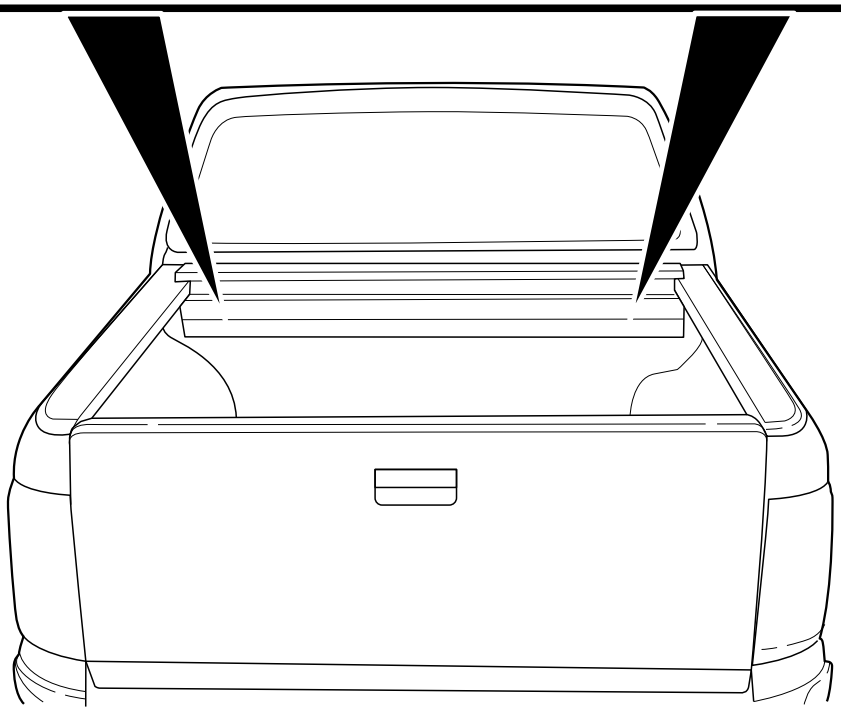

a. Connect Battery loom S2.75 to Receiver loom.
b. **Carefully** connect CI-Loom-short to Receiver loom.

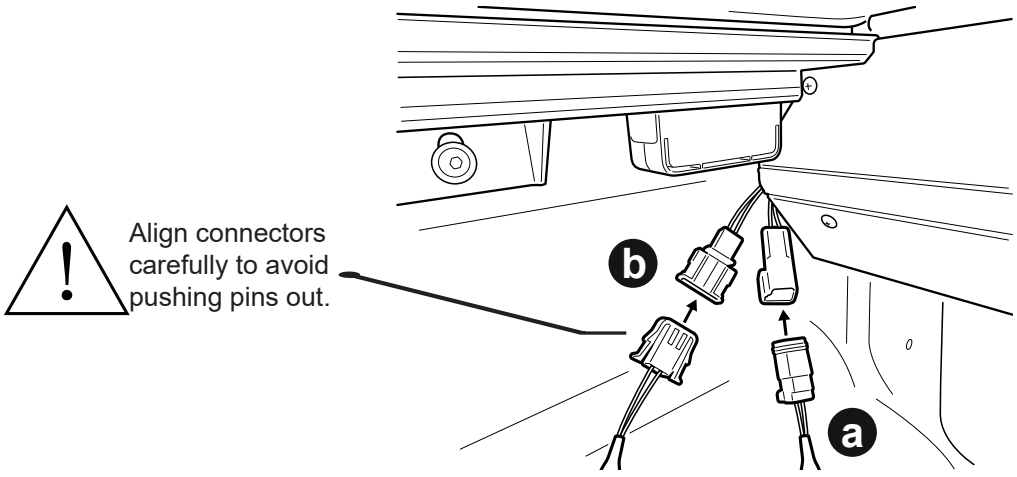

NOTE: 1. To wear in the Roll R Cover please fully open & close the cover approximately 15 times after install is complete.

2. Set your vehicle locking system to unlock all doors with one press of the factory remote unlock button. This setting can be found in your vehicle settings.

Operating instructions:
Press unlock on vehicle key fob to activate controller.
When vehicle is unlocked the side rail sensor buttons will be active to control.
When vehicle is locked the side rail sensor buttons will be inactive.

Using factory key fob to operate:
Pressing unlock twice on the factory key fob within 4 seconds, will activate the roll r cover to open.
Pressing lock twice on the factory key fob within 4 seconds, will activate the roll r cover to close.

Vehicle proximity:
Tapping the proximity twice to open or lock the car door will act exactly the same way as the key fob being pressed twice.

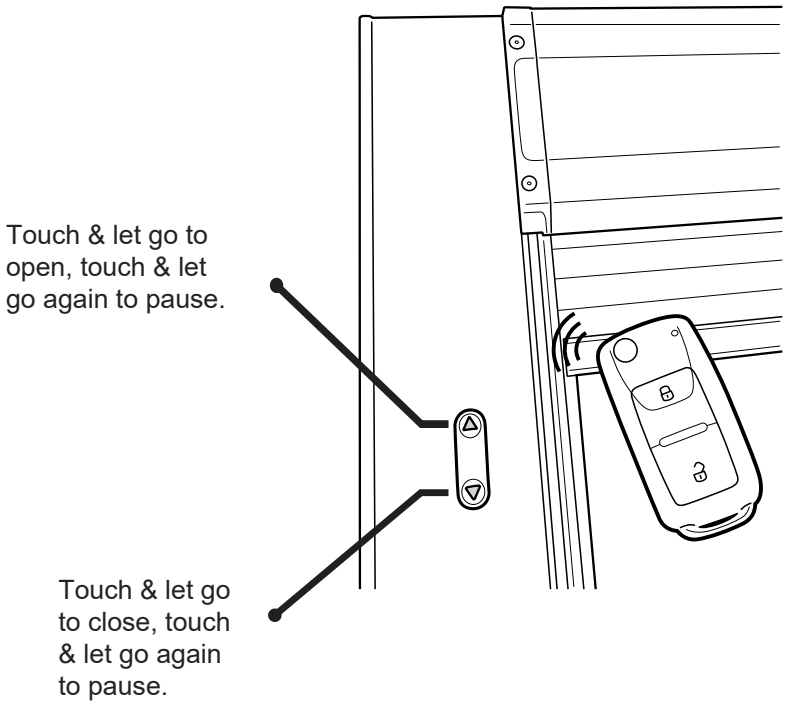

© Roll Я Cover