WWW.HSPUTELIDS.COM

Part No: H4R-S3

INSTALLATION INSTRUCTIONS

Vehicle Model: To suit Toyota Hilux Revo 2016+ Dual Cab

INSTALLATION TIME: 2 Hours (Approximately)

IMPORTANT	• Do not stand/sit or rest heavy objects on Roll R Cover • Humans or animals are not to be under the closed cover at any given time • Tonneau Cover is not dust or water tight • If contact with volatile chemicals occur, clean Cover with mild detergent and water solution
Care Instructions	• Read Instructions fully before commencing installation. • Clean Cover with a mild detergent and water solution • Do not use abrasive cleaners or solvents • Refer to manufactures instructions applicable to power drill. • Protect Tub floor against scratches during installation process.
Maintenance	Refer to Maintenance instructions.
Tools Required	• Pen / Marker • Centre Punch • Drill & Drill bits • Caulking Gun • Silicon - Non Acetic • Scissors & Knife • Spanner & Socket • Tape measure • Holesaw • Filing tool • Soapy water solution • Allen Key set • Screw driver • Rust Inhibitor • Trim Removal Tool

PERSONAL PROTECTIVE EQUIPMENT:

Rubber Gloves

Goggles

Hearing Protection

© Roll Я Cover

BOX CONTENTS

LEFT & RIGHT SIDE RAIL

S2.5-DC-AE-002ps-H4

S2.5-DC-AE-003ds-H4

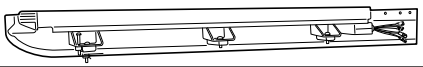

CANISTER ASSEMBLY

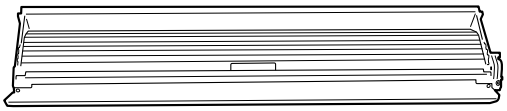

S3-DC-AF-H4R-001/002

CANISTER TOP COVER

S2.5-DC-AE-005 -H4

STANDARD KIT

COVER END CAPS S2.5-DC-PI-004ps S2.5-DC-PI-004ds	 COUNTERSUNK SCREW Qty - 4	 FLAT PLATE Qty- 2	 CABLE TIE Qty x 16	 BATTERY LOOM S2.75	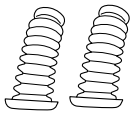 Drainage pipe Qty - 2
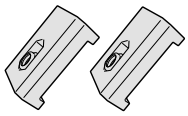 SIDERAIL CLAMP Qty - 6	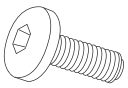 M8 x 35mm Qty - 6	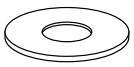 M8 WASHER Qty - 6	 M8 SPRING WASHER Qty - 6	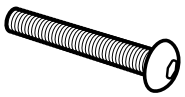 M8 x 70 mm Qty - 2	 M8 NUT Qty - 8

SPECIFIC KIT H4R

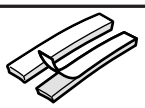 12mm wide x 9.5 thick x 125mm long Qty-2	 CL-LOOM-LONG	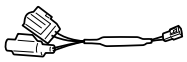 H-PATCH

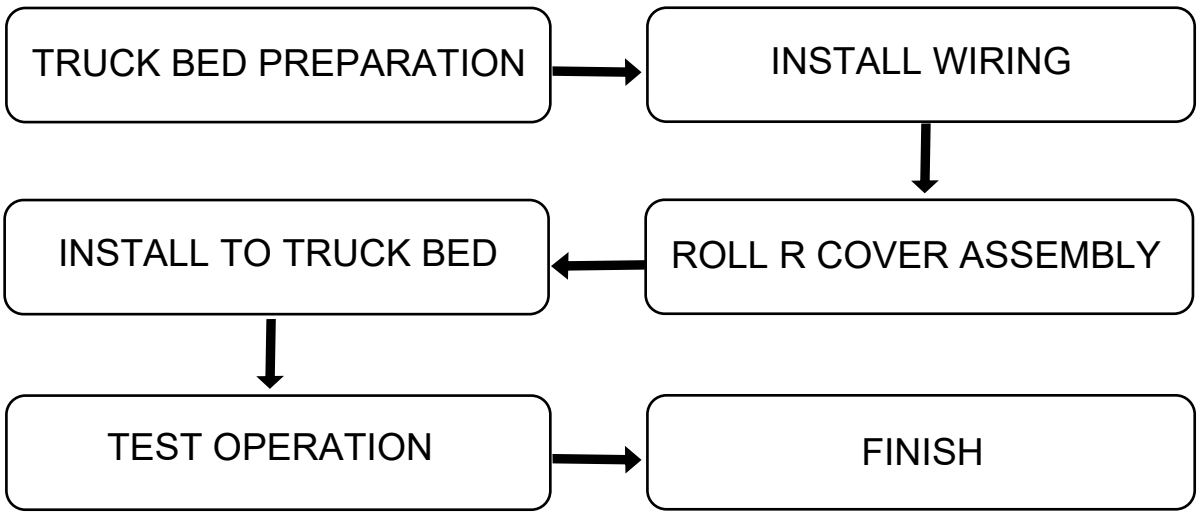

© Roll Я Cover

TUB PREPARATION

If the Vehicle is fitted with a cabin guard or sports styling bar, remove from Ute Tub (truck bed).

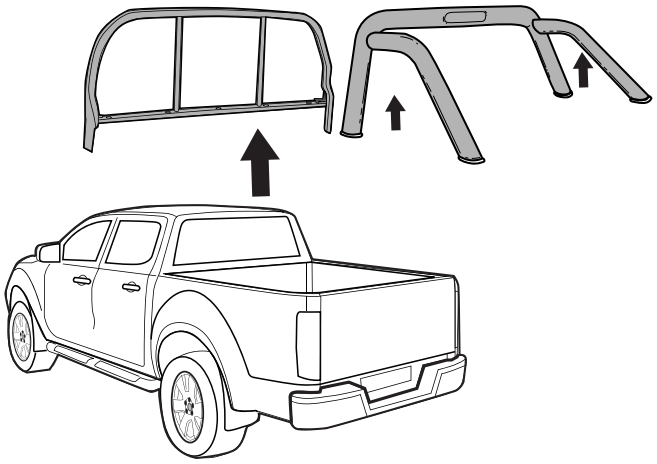

Clean are as indicated.

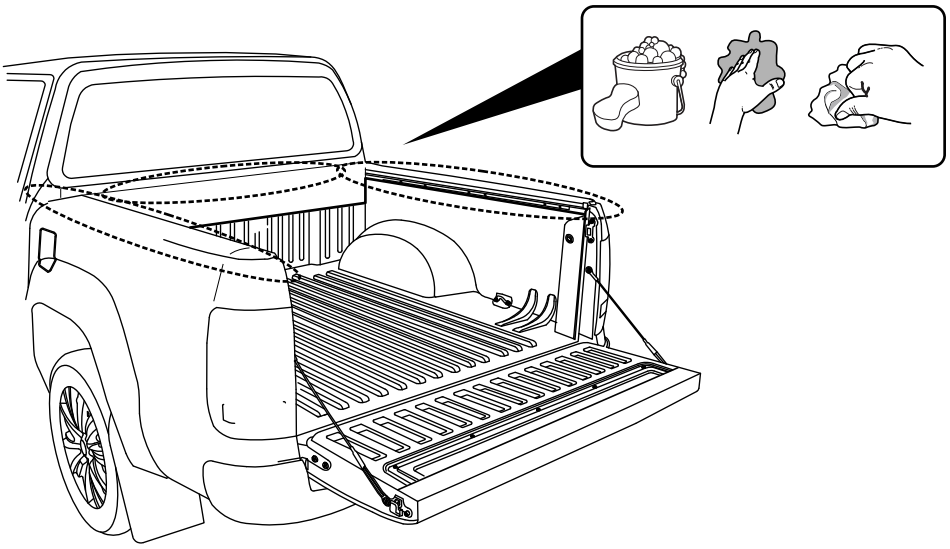

Measure 10mm down from top of tailgate and trim tailgate liner.

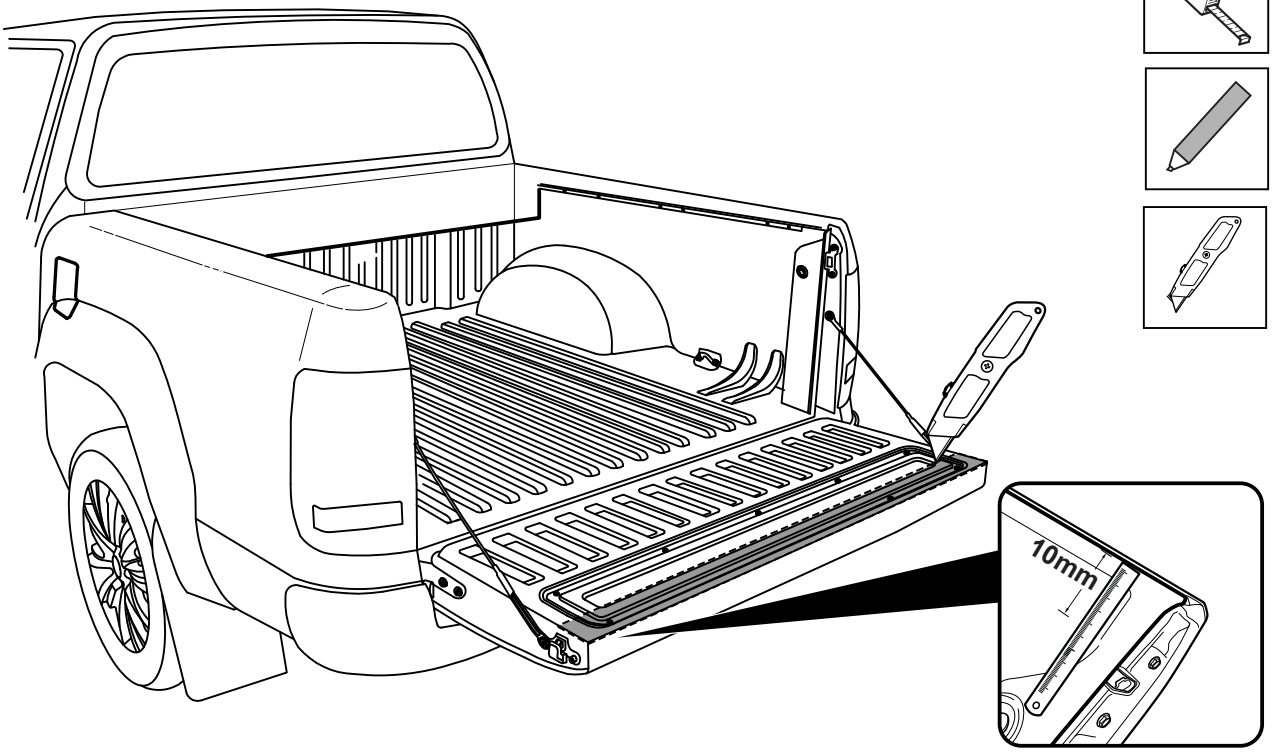

© Roll Я Cover

Measure 160mm down from top of Ute bed (head rail) and mark across to the other side.
Trim front of bed liner by 160mm from the top of the Ute bed as shown.

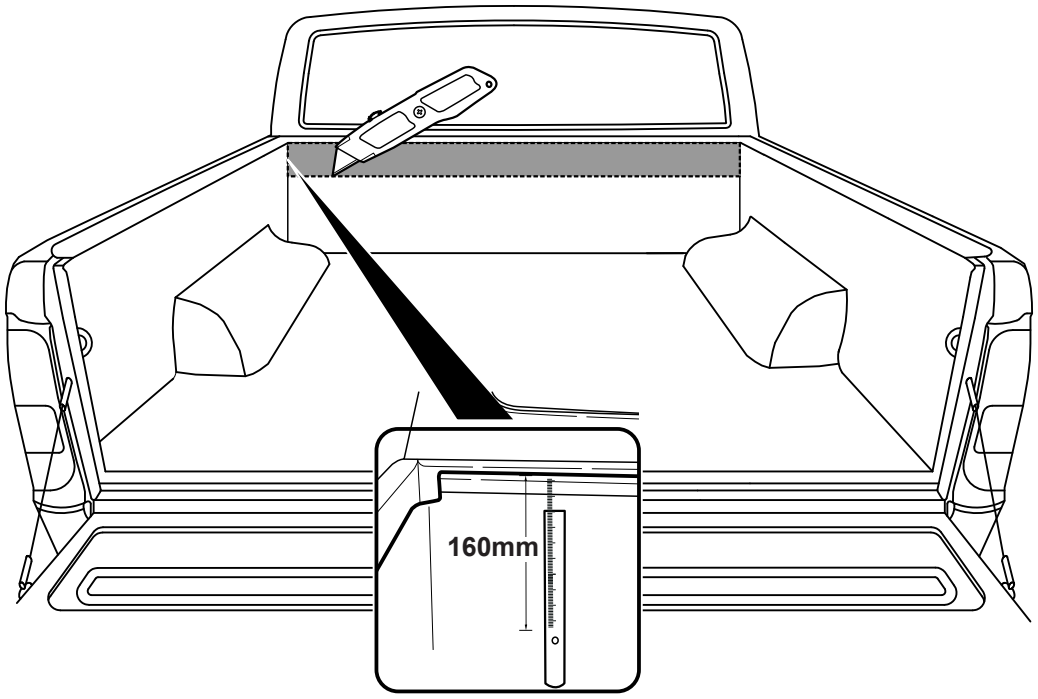

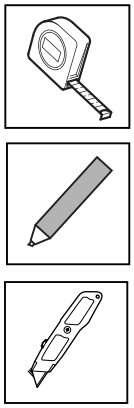

Cut a 20mm split for bed liner to flex.

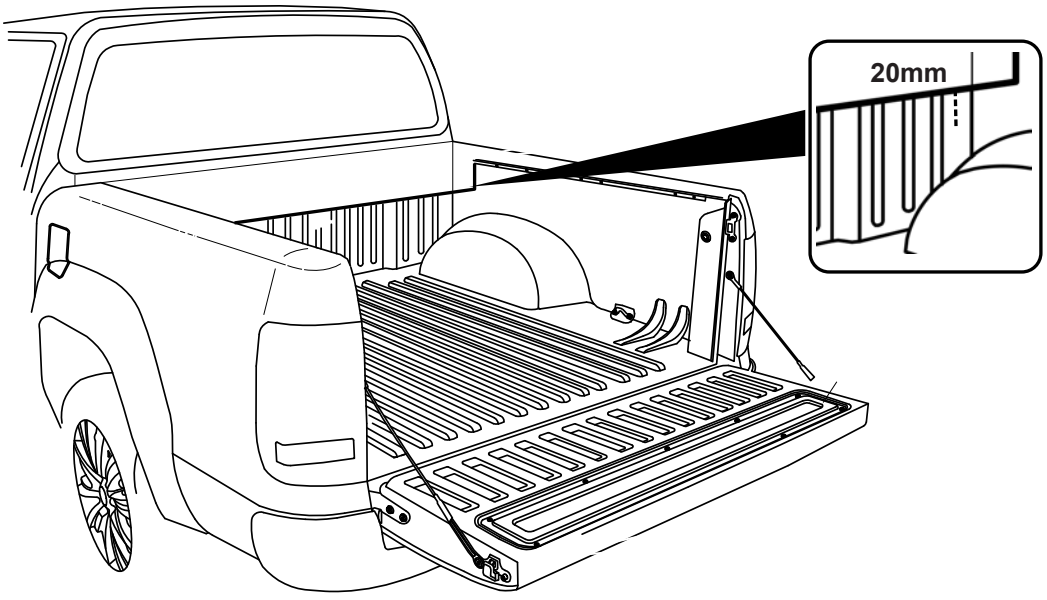

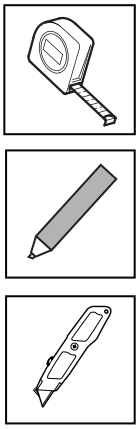

Measure down from top of assembly bar 200mm & 135 mm from inside wall of bed liner as shown. Repeat to the other side.
Using a 50mm hole-saw drill the liner only as indicated.

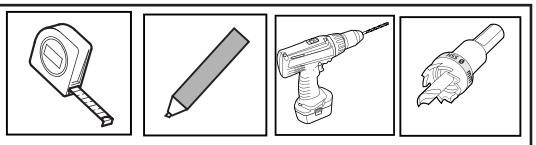

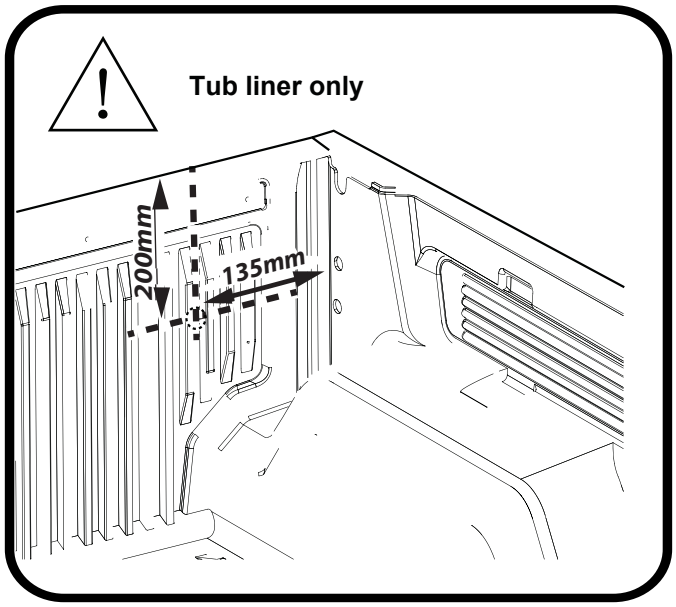

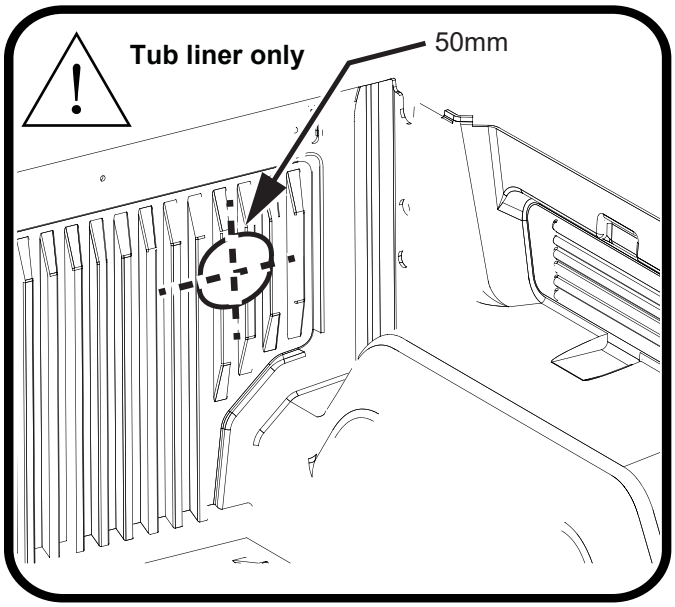

Measure down from top of headboard 200mm & 135mm from inside wall of bed as shown.
(or 95mm if measuring from the side of the top rail) Repeat to the other side.
Using a 30mm hole-saw drill through tub front panel, file away any sharp edges. Apply anti rust coating. Repeat to other side.

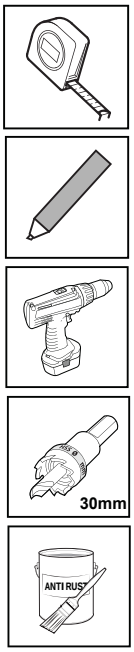

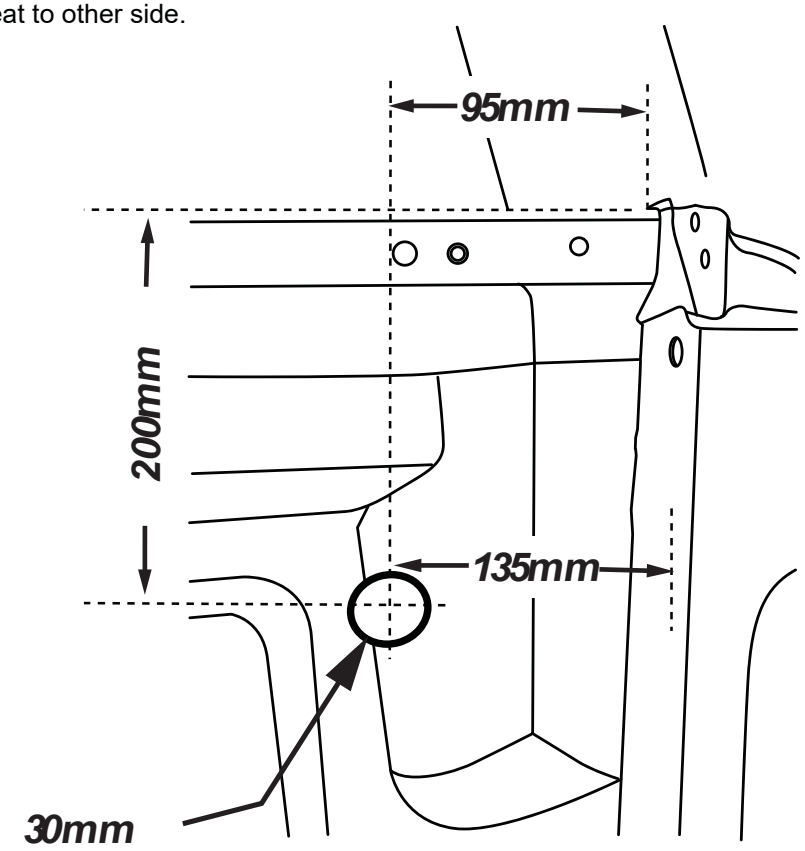

ATTENTION: Do not exceed 30mm hole.

© Roll Я Cover

Seal any exposed gaps or holes on the front panel of the Ute bed with sealant.

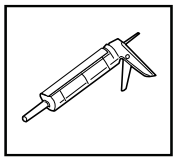

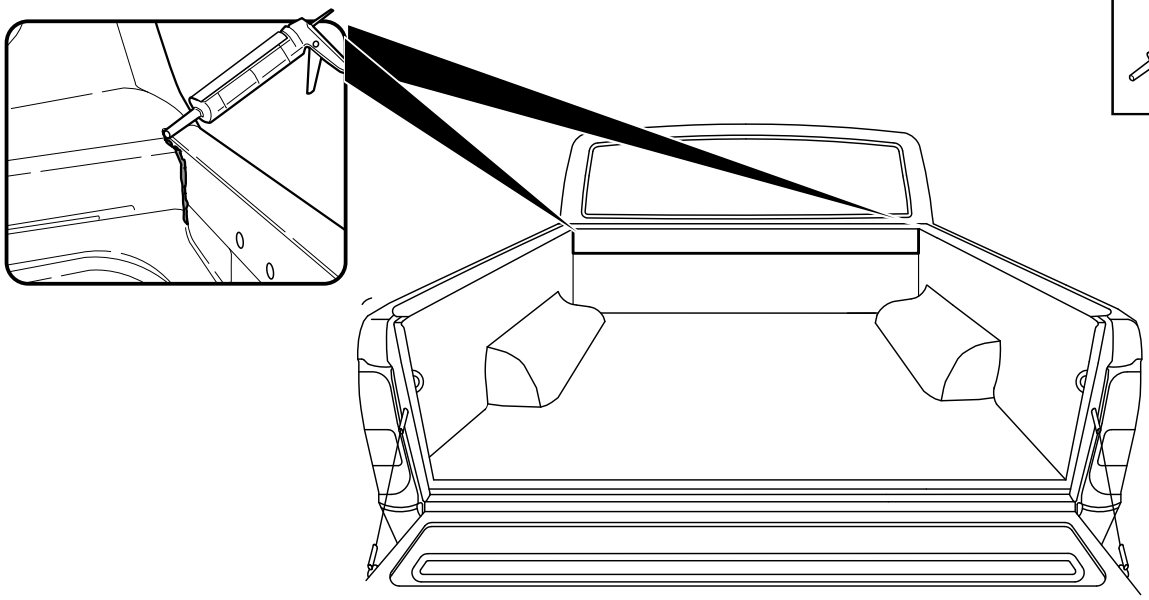

Carefully unpack the box.

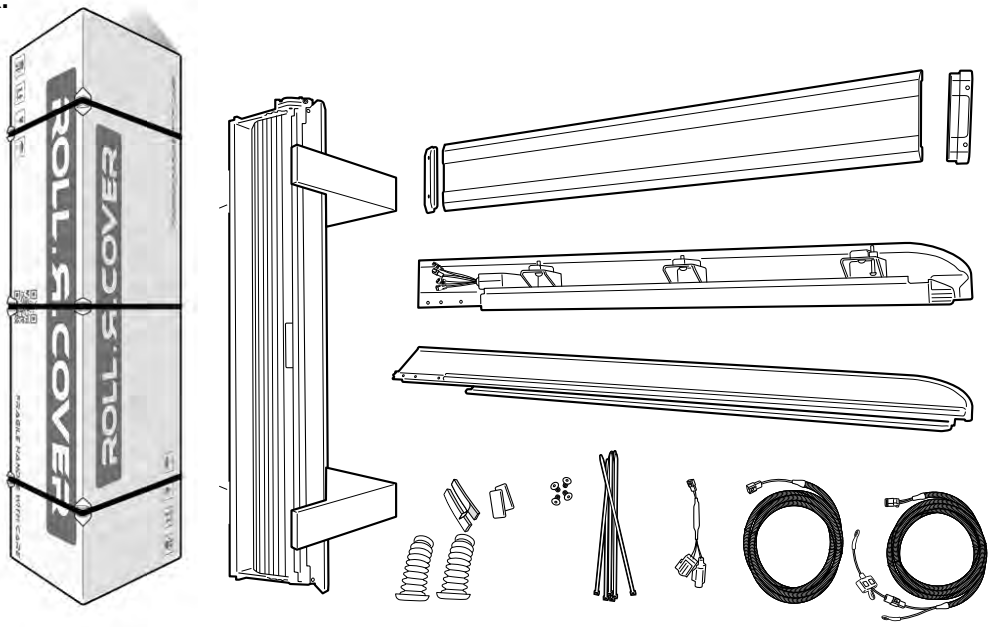

Install front drain pipes (55mm diameter end of hose) through pre-drilled holes on the front tub panel.

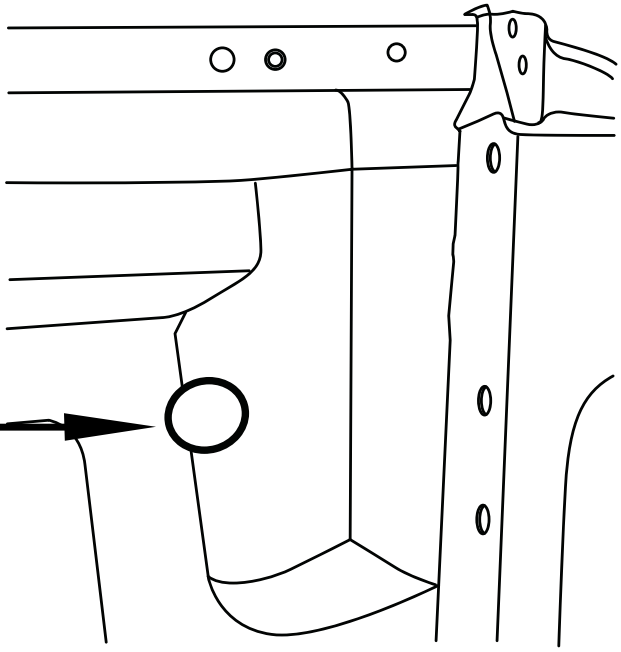

Note: With care push tube in.
Taking care pull the tube back so it seals correctly against the front panel of the tub.

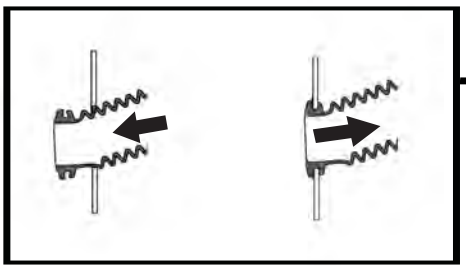

© Roll Я Cover

Disconnect fuse patch from battery loom S2.75.

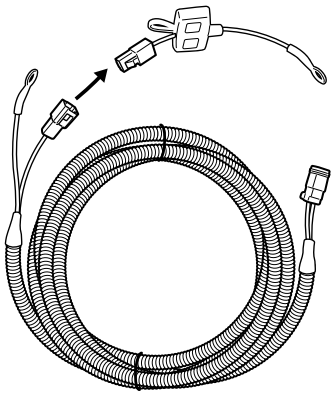

Wiring Harness steps

1 **Feed Battery Loom S2.75 through the cavity**

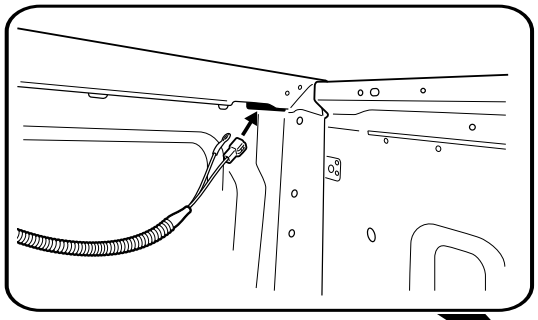

3

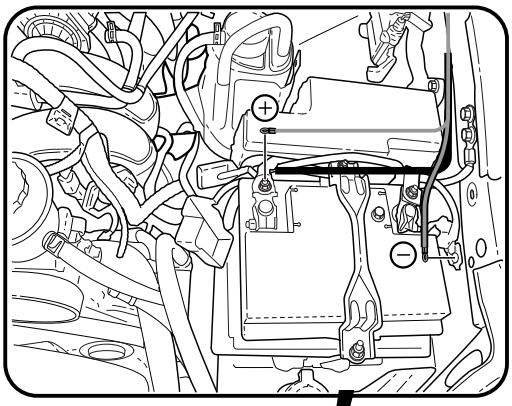

2

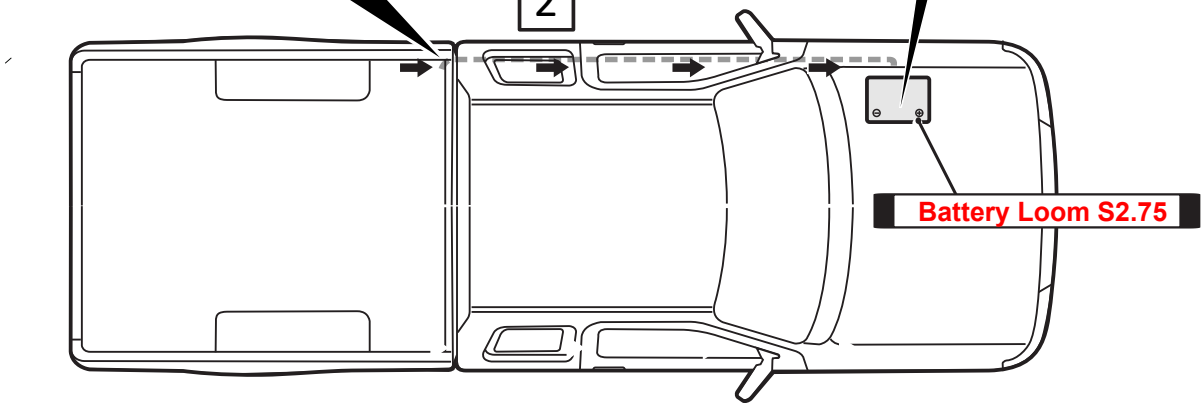

Run the wiring from the front corner cavity (leaving 200mm in the tub) to the battery over the chassis rail. Making sure to keep away from hot obstructions and cable tie every 400mm. Reconnect fuse patch to battery loom S2.75, now attach fuse patch to positive of battery and earth to the body of the Ute.

Feed CL-Short-Loom through the cavity.

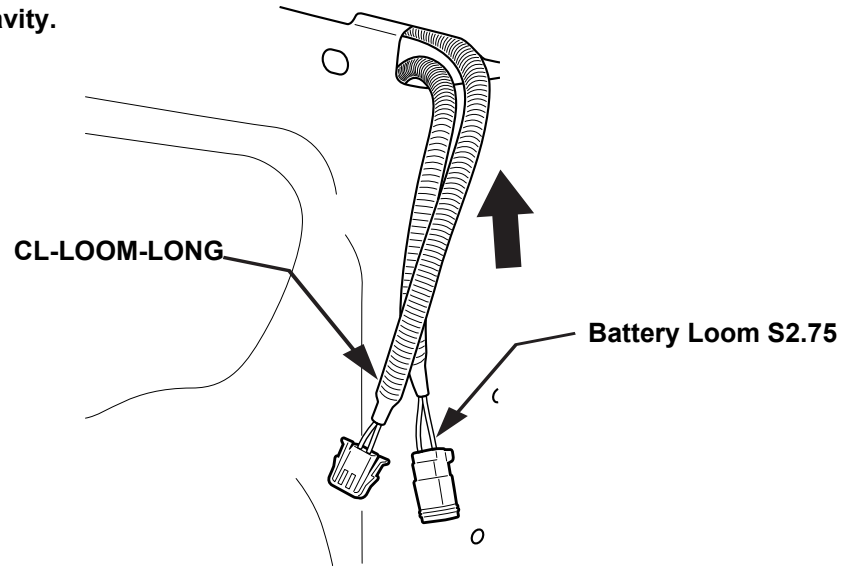

© Roll Я Cover

Run wiring from front tub corner cavity to passenger side kick panel. Cable tie wiring every 500mm over chassis rail. Find the large grommet on the firewall, make a small incision & run the loom through it to enter the cab and towards the kick panel. Seal accordingly.

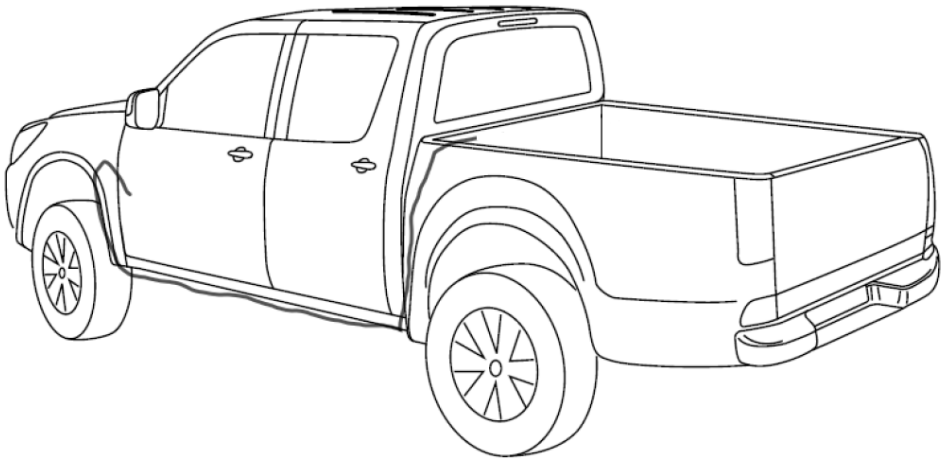

At the front passenger side foot well area:

- Remove front passenger scuff plate (1)
- Remove the kick panel trim nut (2)
- Remove the kick panel (3)

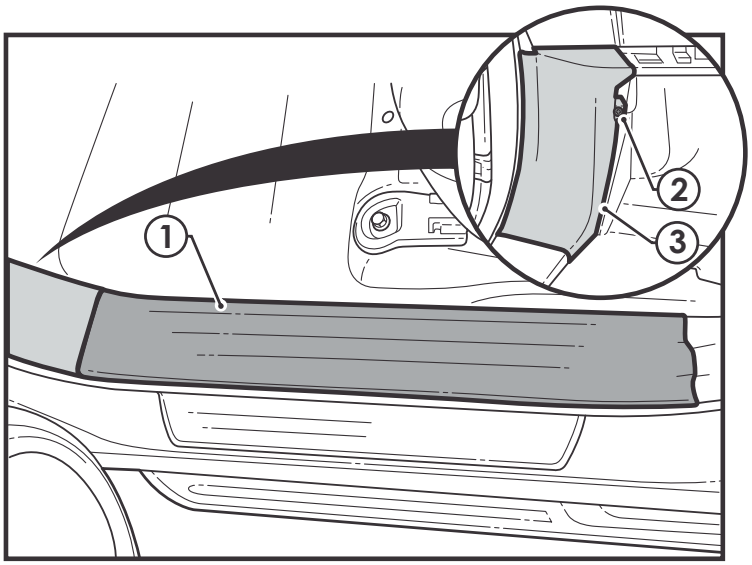

Disconnect 20 way connector as indicated.

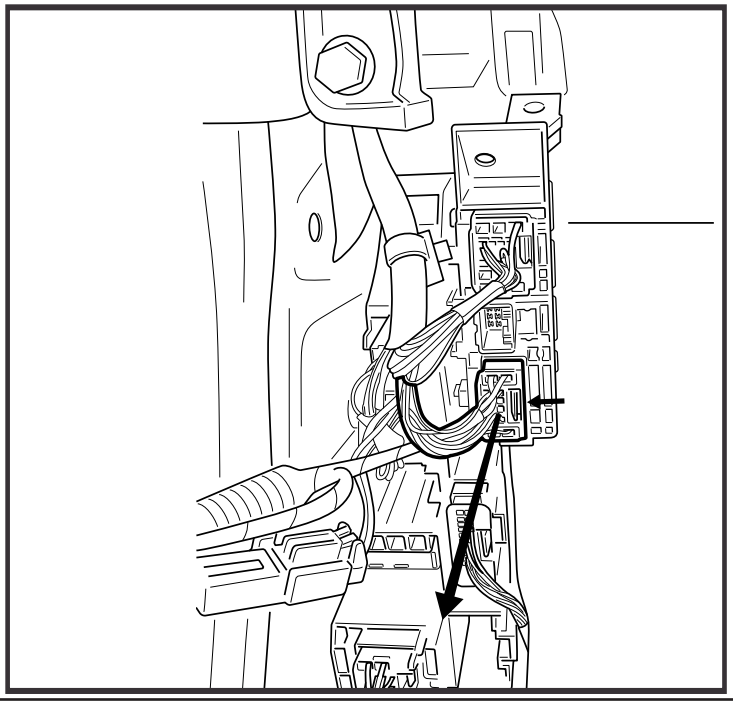

© Roll Я Cover

1. Connect H-patch 20 way male connector to vehicle's female housing.
2. Connect vehicles 20 way connector to H-patch female housing.

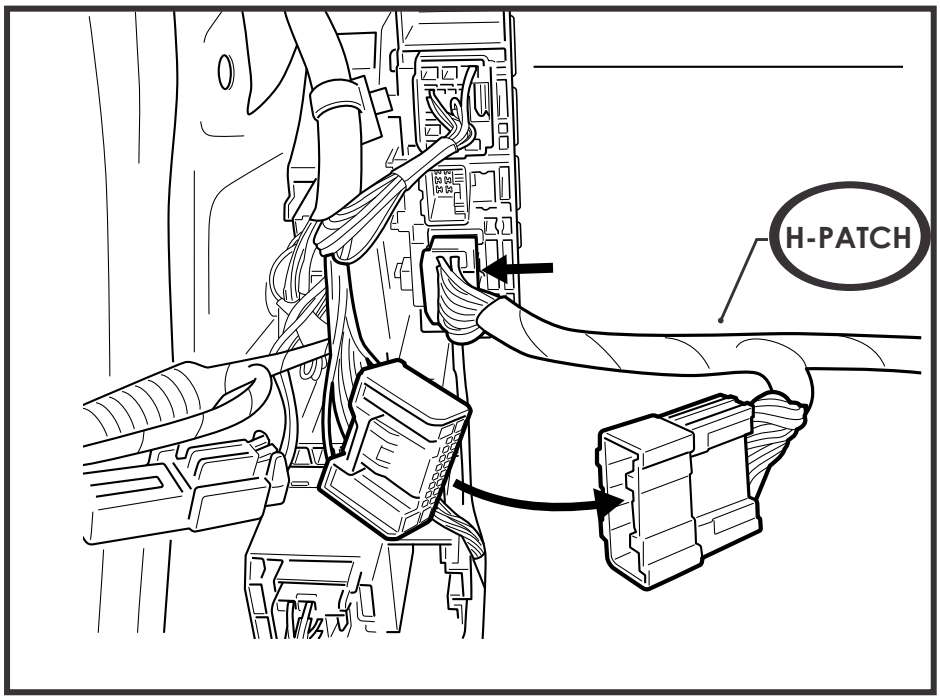

Connect H-PATCH loom to CL-LOOM-LONG

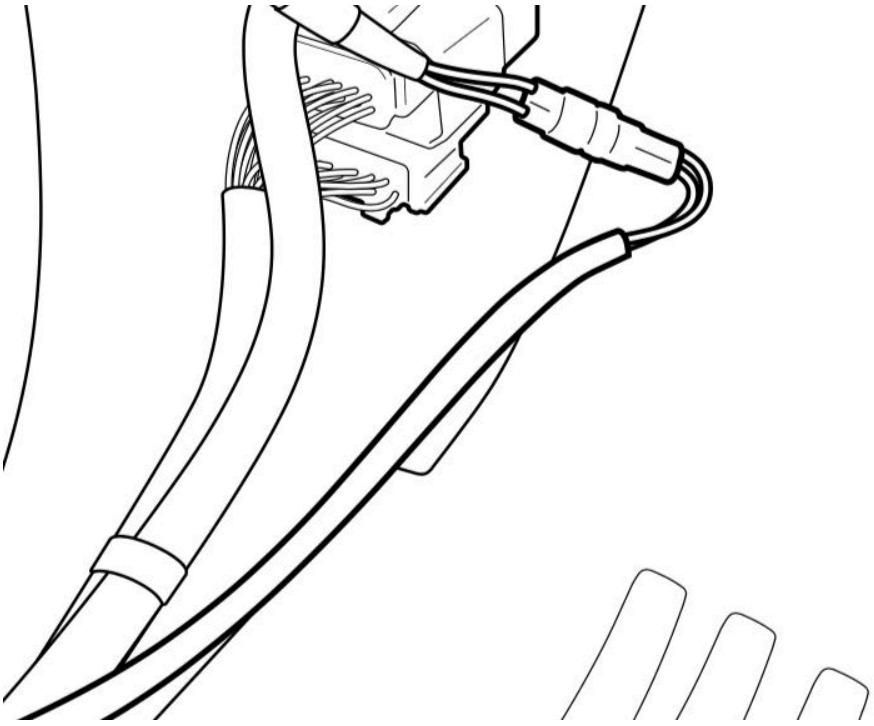

keep the cannister in the foam blocks from the packaging for assembly.

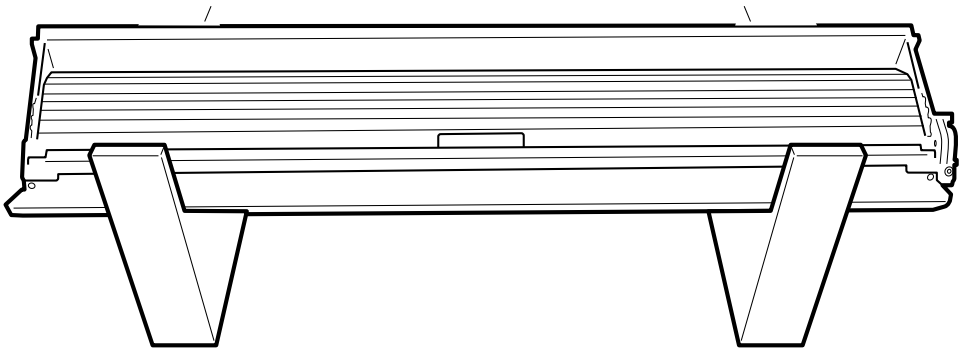

With assistance turn the canister on its back on the foam blocks.

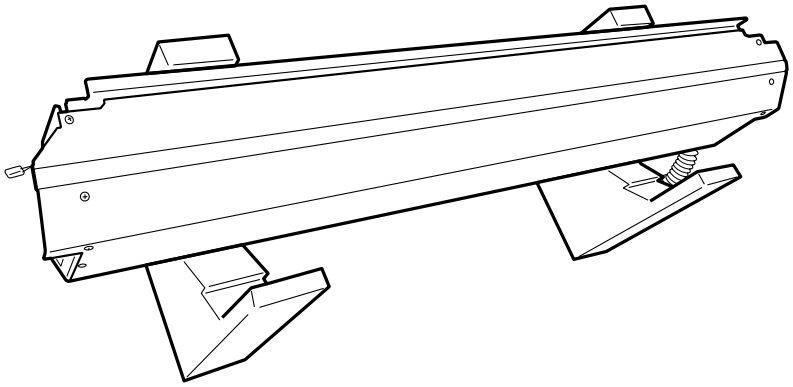

Disengage motor from the axle by unfastening the 3 Screw as indicated. Retain all parts.

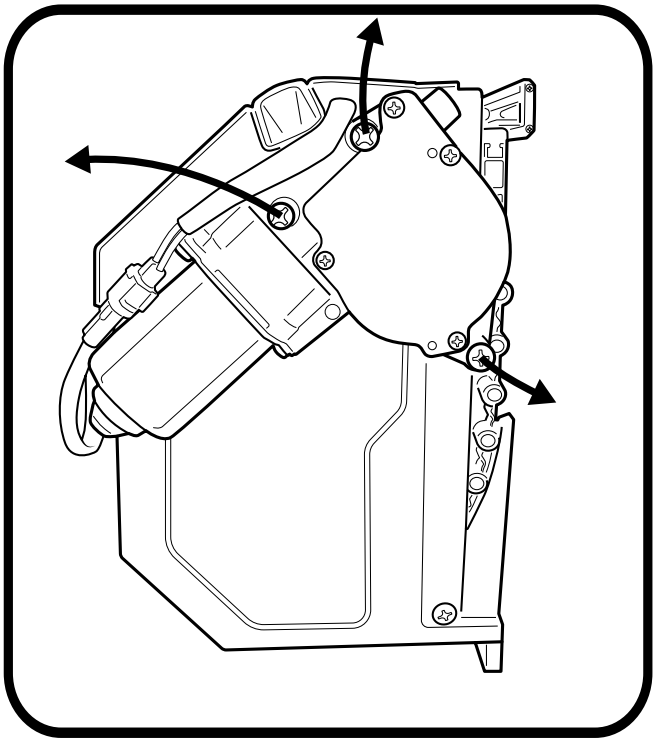

Remove and retain the 3 screw from the canister as indicated.

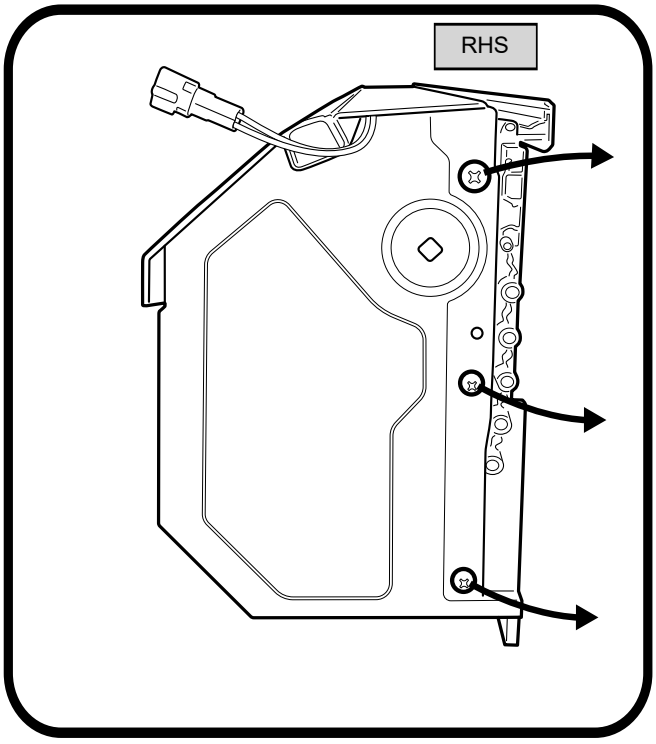

© Roll Я Cover

Now on the other side, remove and retain the 4 screws from the canister as indicated.

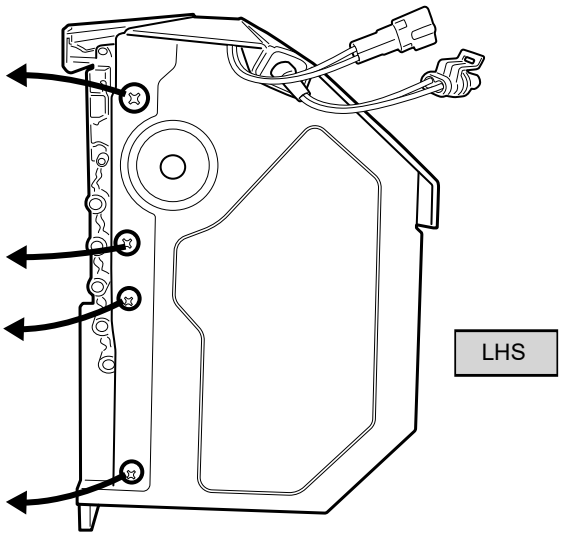

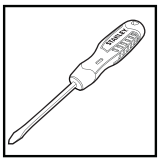

Align side rail to side of canister, guide the track to go in between the curtain end robber stop.

NOTE: LHS side rail to be assembled first.

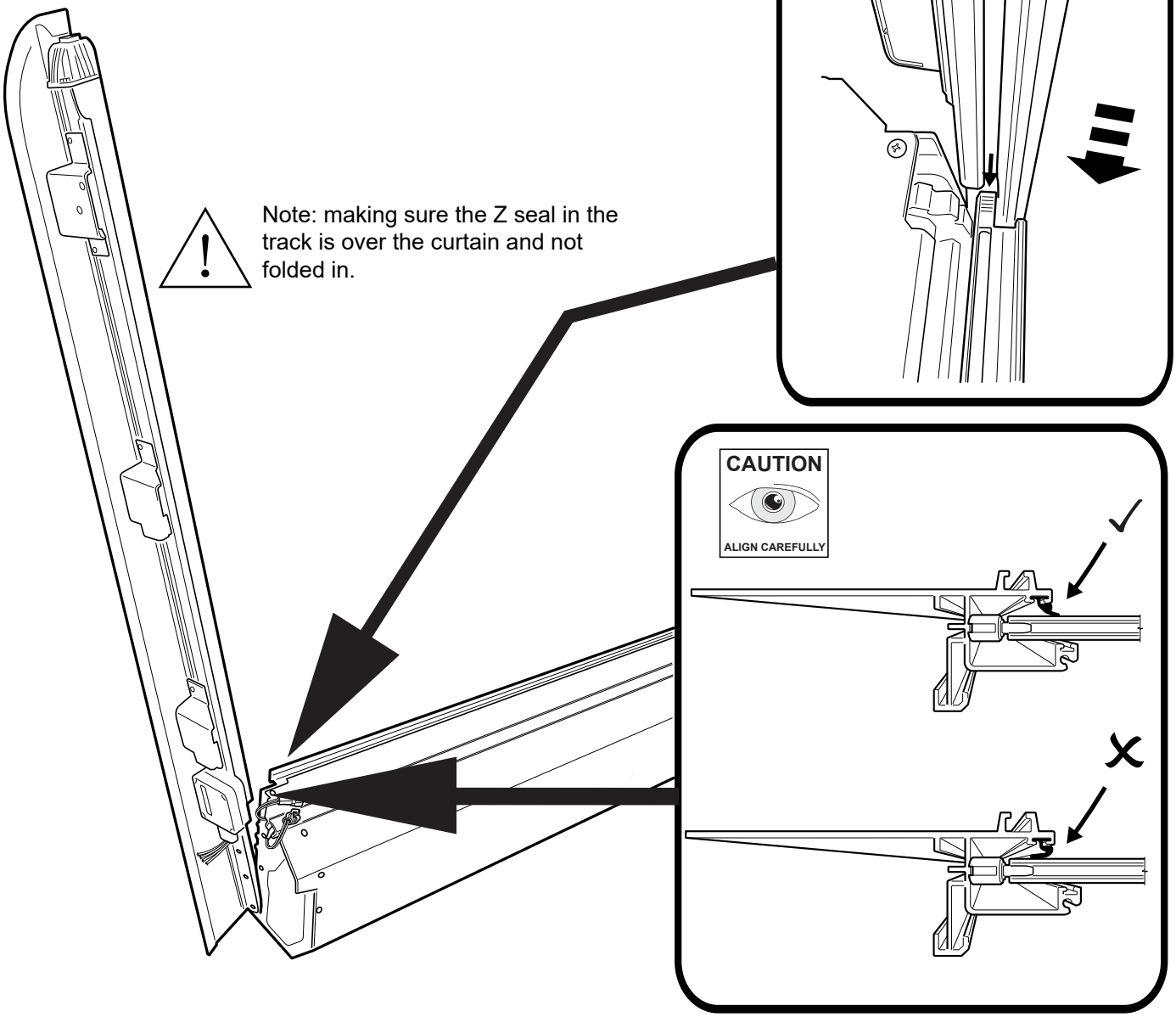

© Roll Я Cover

Fasten the side rail using the retained screws, spring washer and washer.

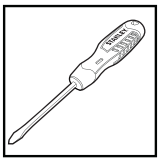

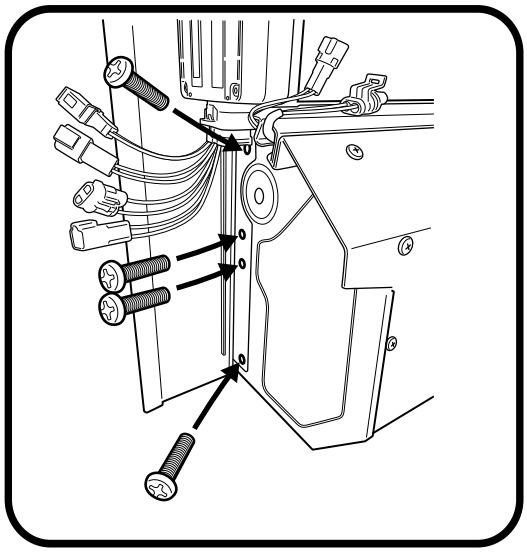

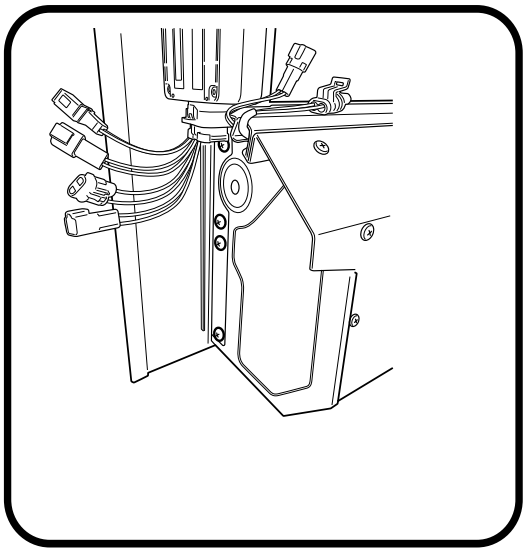

Connect motor connector to receiver

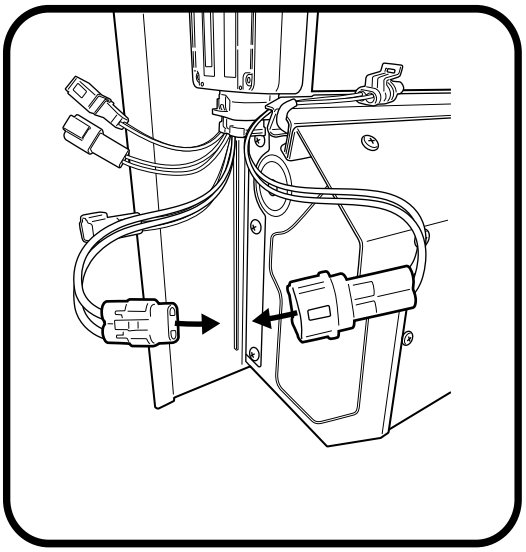

Connect LED Loom to receiver

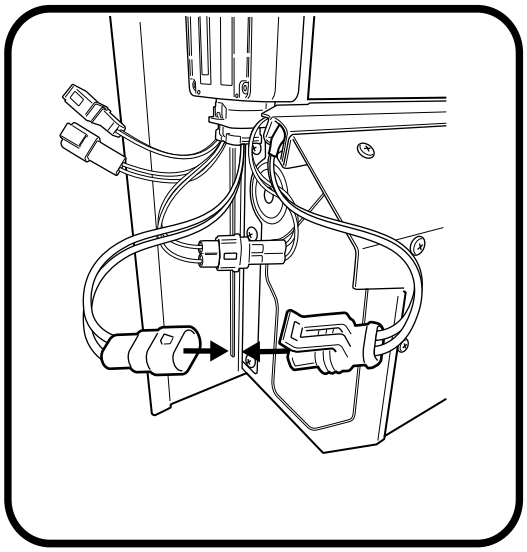

© Roll Я Cover

Align side rail to side of canister, guide the track to go in between the curtain end robber stop.

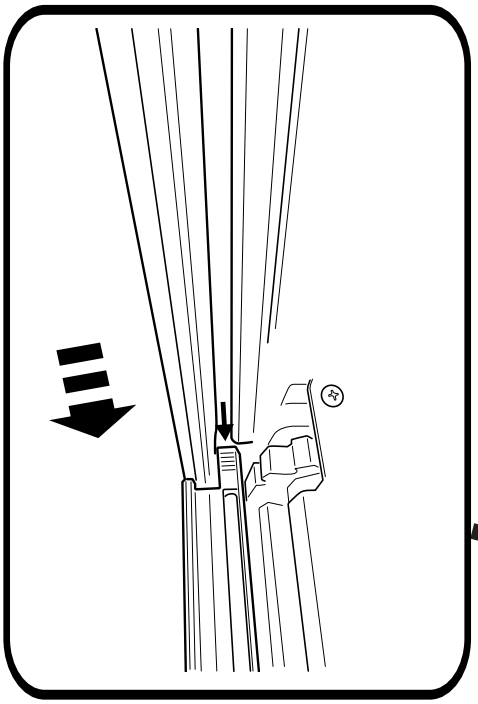

Note: making sure the Z seal in the track is over the curtain and not folded in.

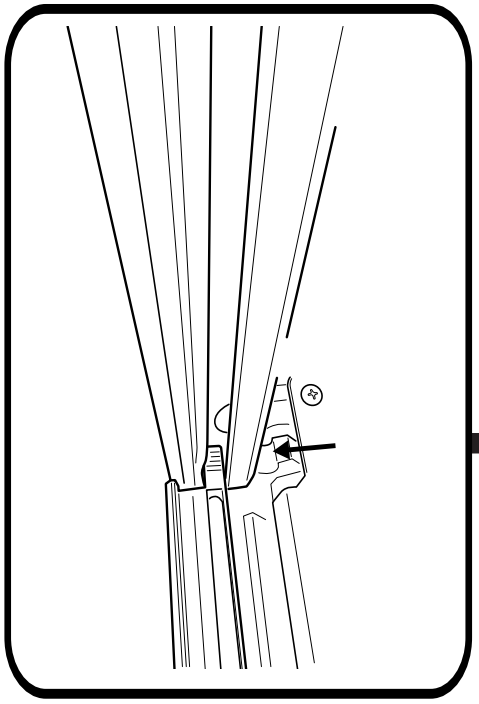

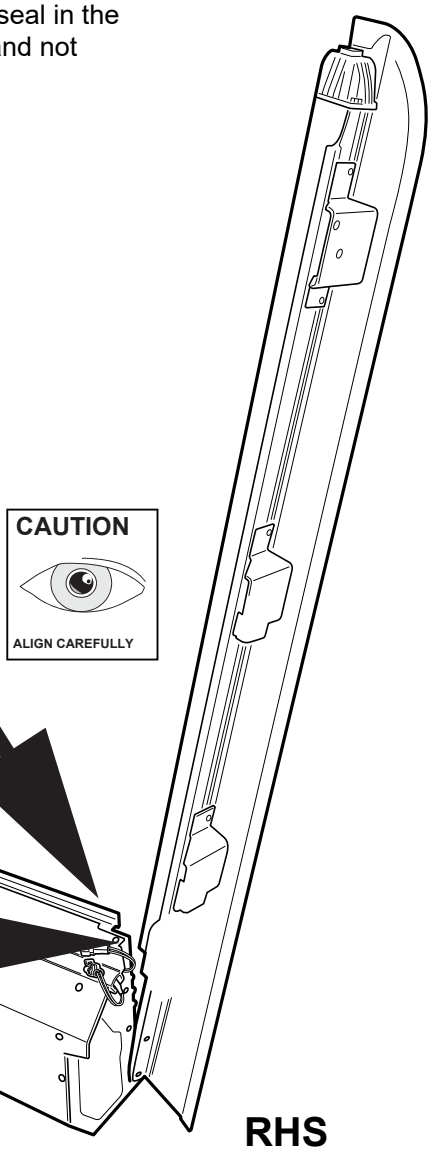

RHS

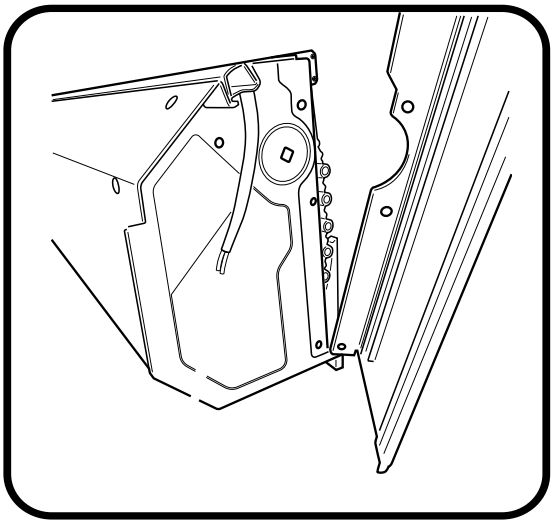

© Roll Я Cover

Fasten the side rail using the retained screws, spring washer and washer, only to the locations indicated.

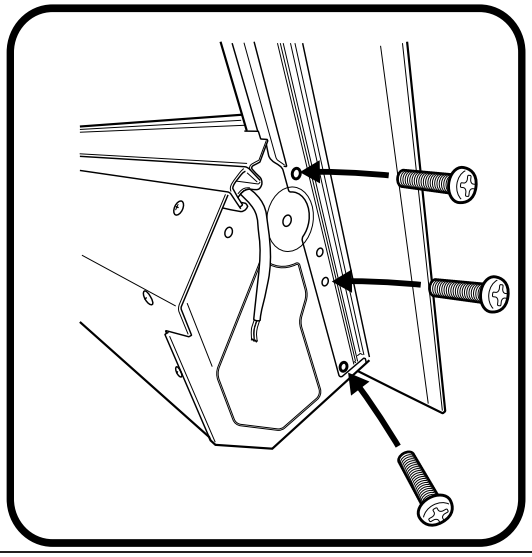

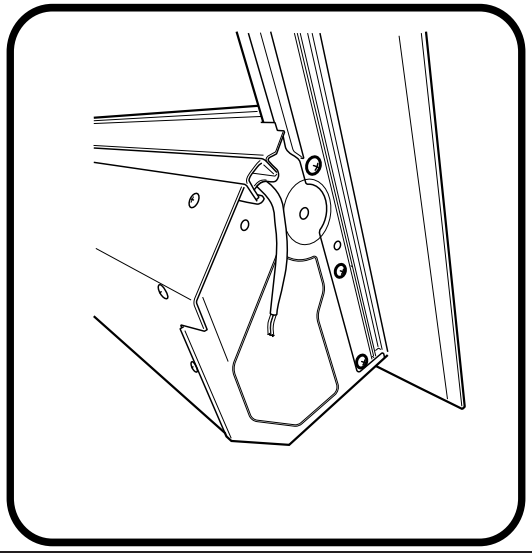

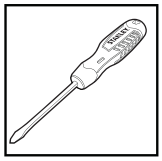

Feed M6 bolt through spring washer, motor and rubber bush.
NOTE: Rubber bush orientation has to be as per image. (side with text on rubber, to face the motor).

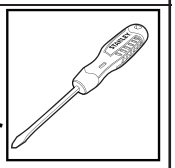

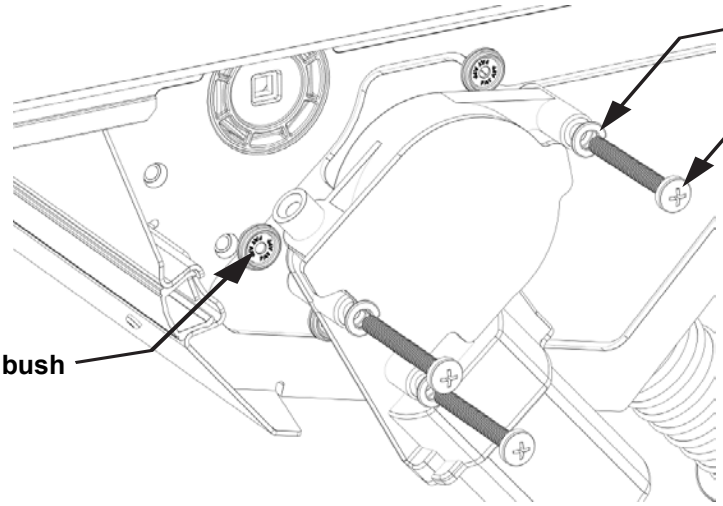

Align & insert motor shaft to axle.
NOTE: Pull / push curtain for axle to rotate.

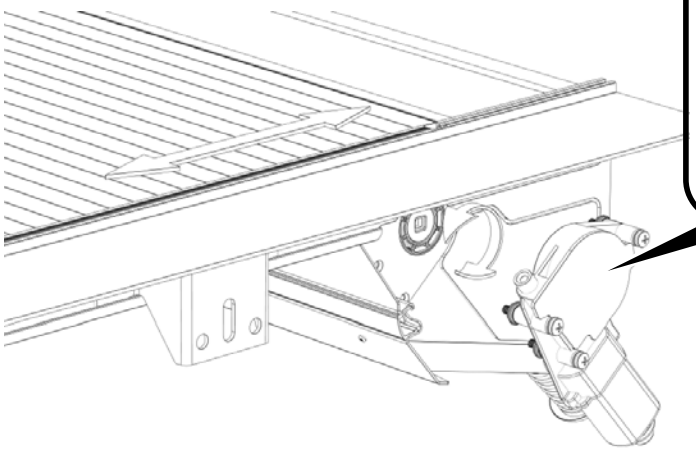

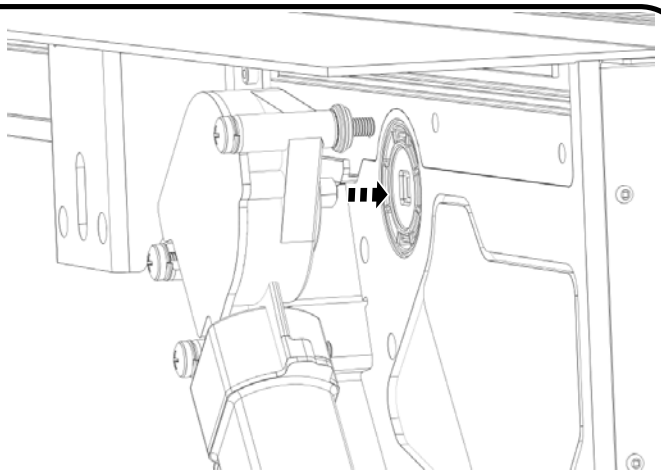

Motor Shaft must line up accordingly to axle.

© Roll Я Cover

Fasten all 3 screws to 2nm torque. Over tensioning will cause operating issue's.

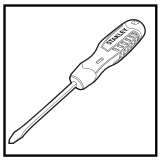

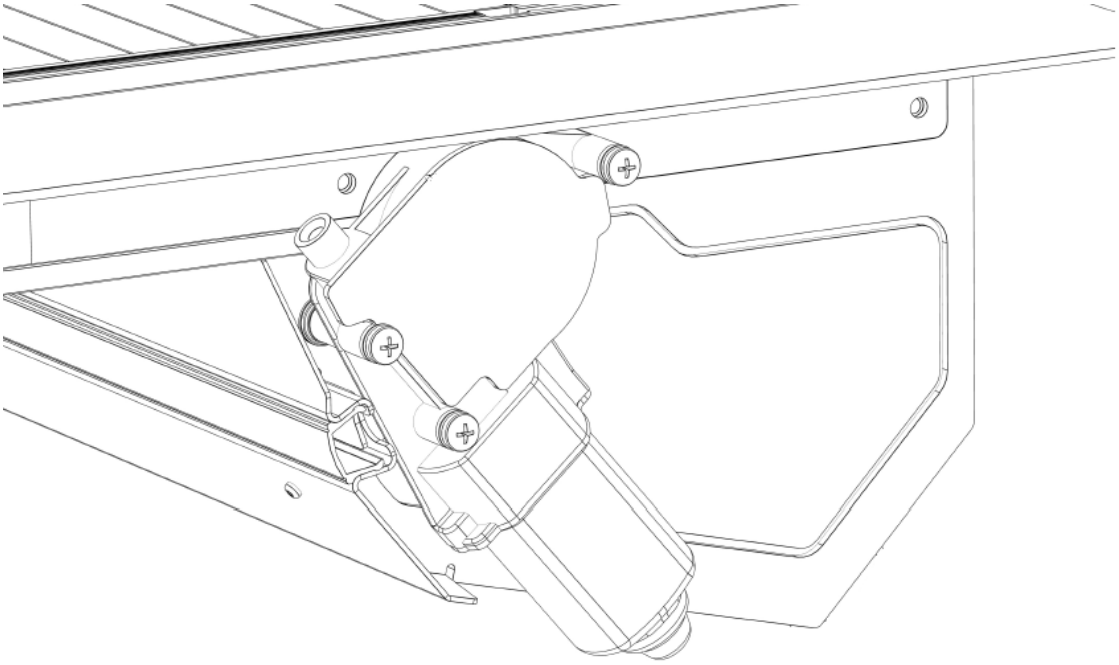

Motor is to sit level.
Any obstructions between motor and canister may cause operating issues.

Apply 15mm foam tape to side rail as indicated. NOTE: Join foam firmly to the per-fitted foam of the canister. Carefully trim excess off & discard as indicated. Repeat on the other side.

a

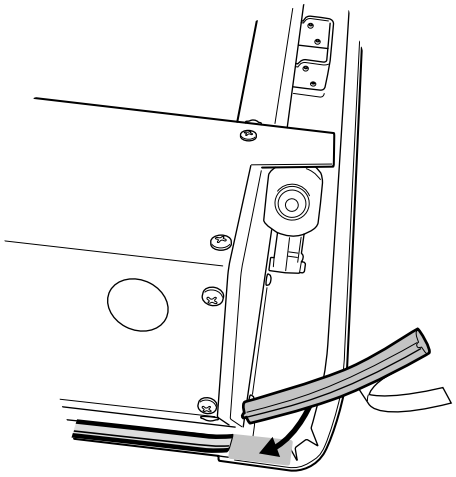

b

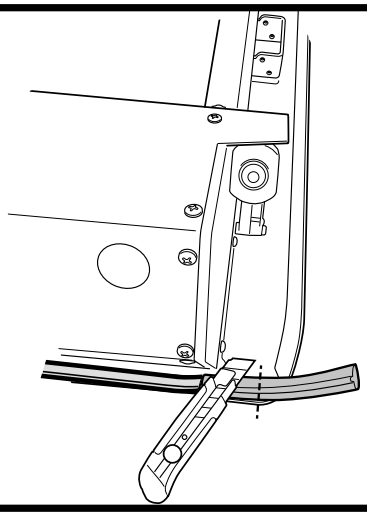

c

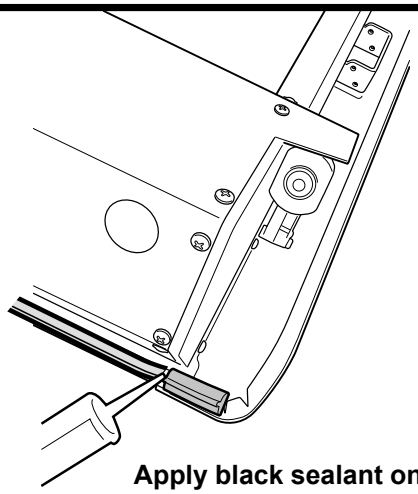

Apply black sealant on the join.

d

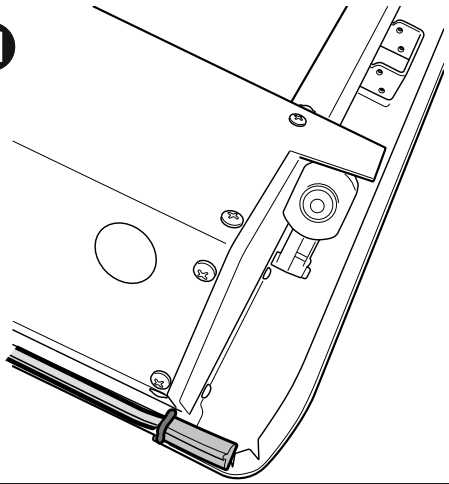

© Roll Я Cover

Carefully bring down the assembled unit.

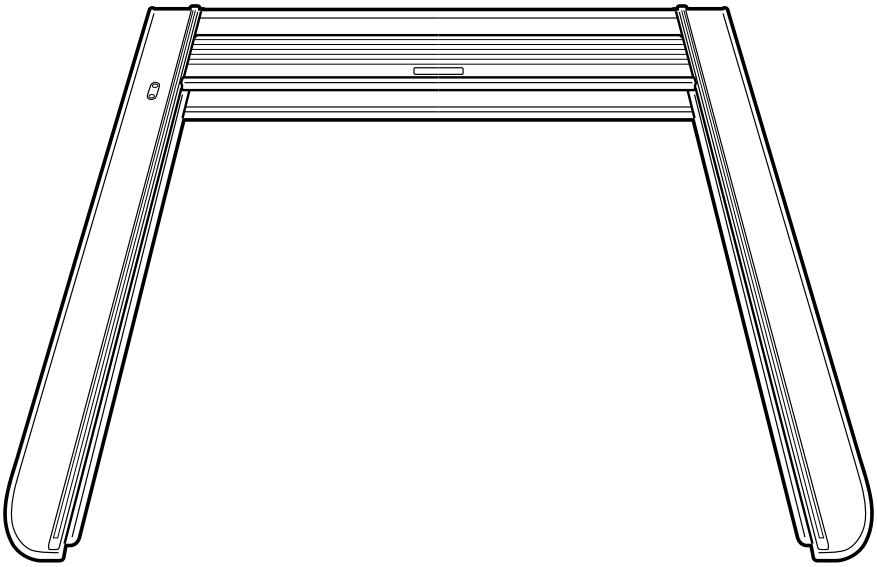

Insert side end caps to the top cover.

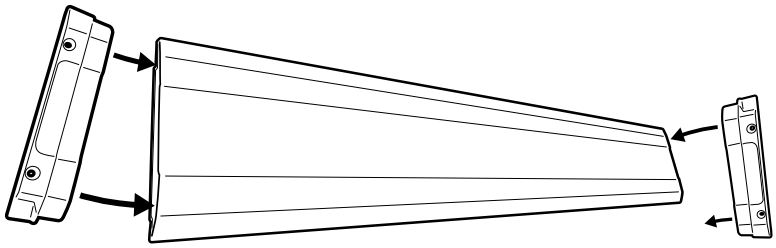

Place & Align top cover over the canister and side rails.

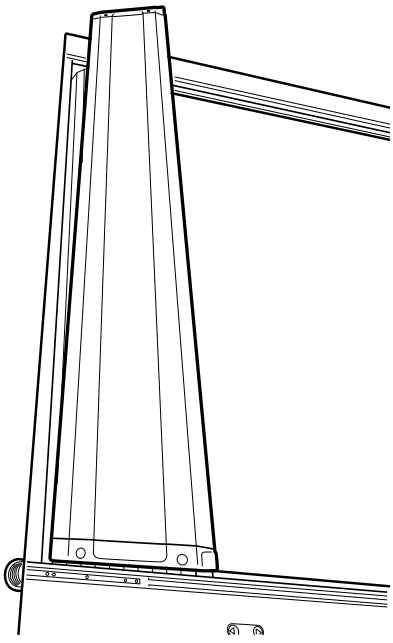

Using countersunk screws provided, line up end cap holes to the threads on the side rail.
Fasten to 3nm torque. Repeat to the other side.

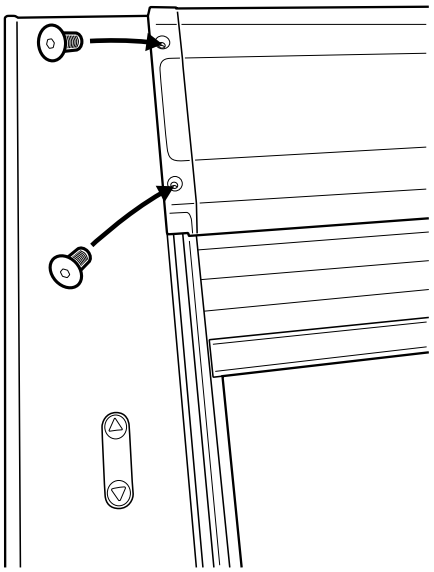

© Roll Я Cover

Place the Roll-R-Cover unit on to Ute bed.

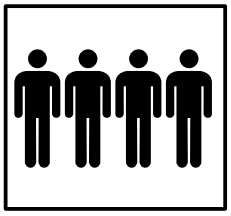

4 People
Recommended for lift

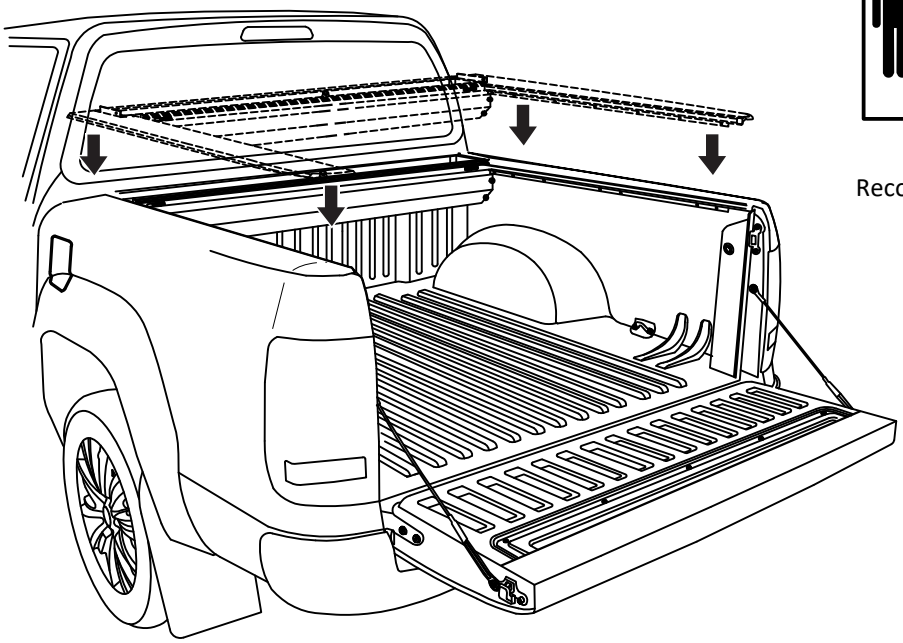

With care, pull out any side rubber that has folded under the side rail.

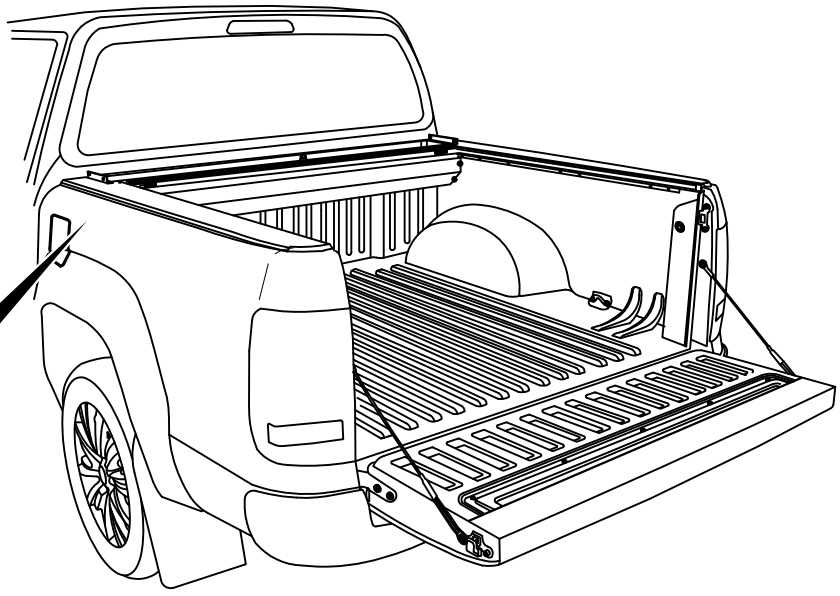

LHS & RHS

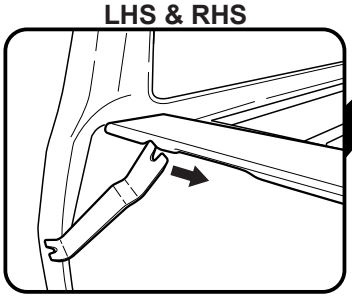

With the tailgate up (Closed position), Pull left & right hand side rails towards the tailgate, stopping short by 5mm between tailgate and side-rail end-cap.

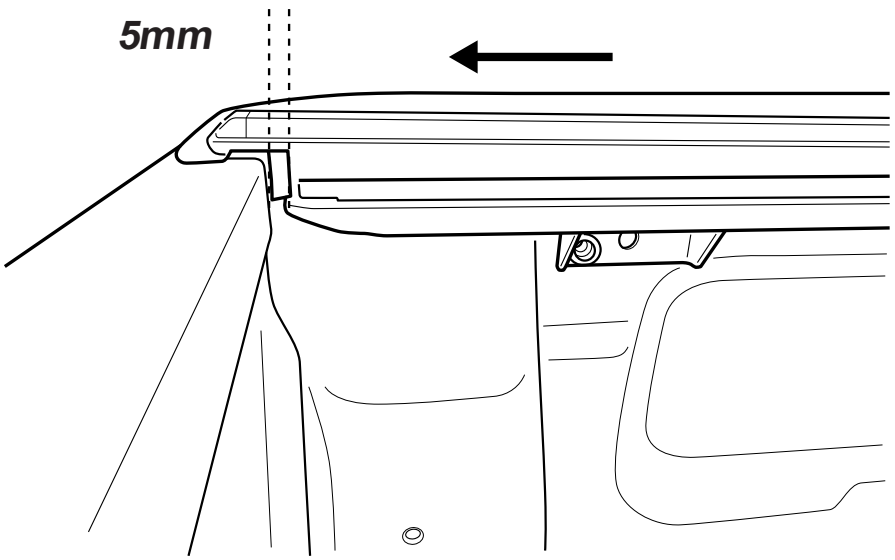

Foam compressed to 5mm when tailgate is closed.

© Roll Я Cover

Gap between tailgate and side-rail end cap to be 5mm.

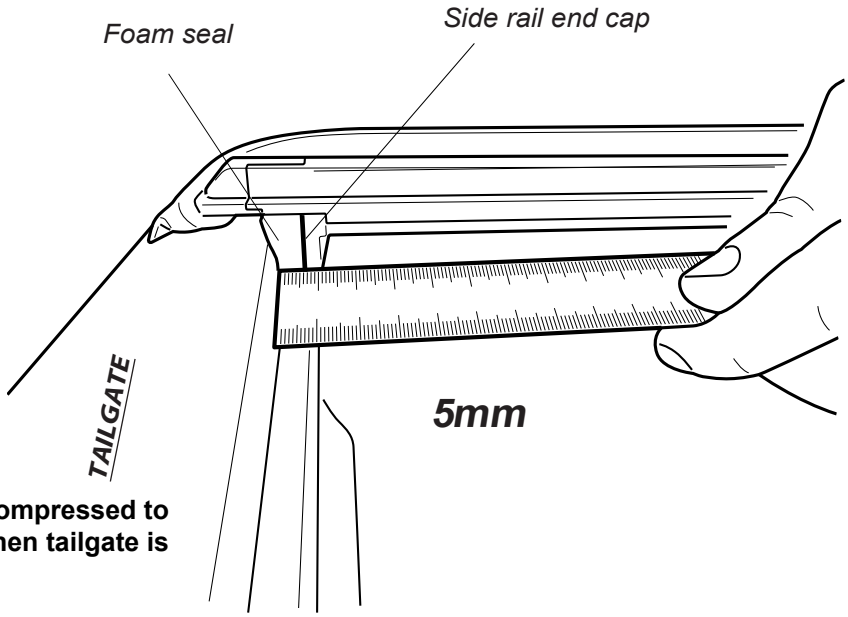

Foam compressed to 5mm when tailgate is closed.

Position clamp behind the inner top lip of the bed rail and the center elongated hole of the side rail mounting brackets. Repeat to all 6 positions.

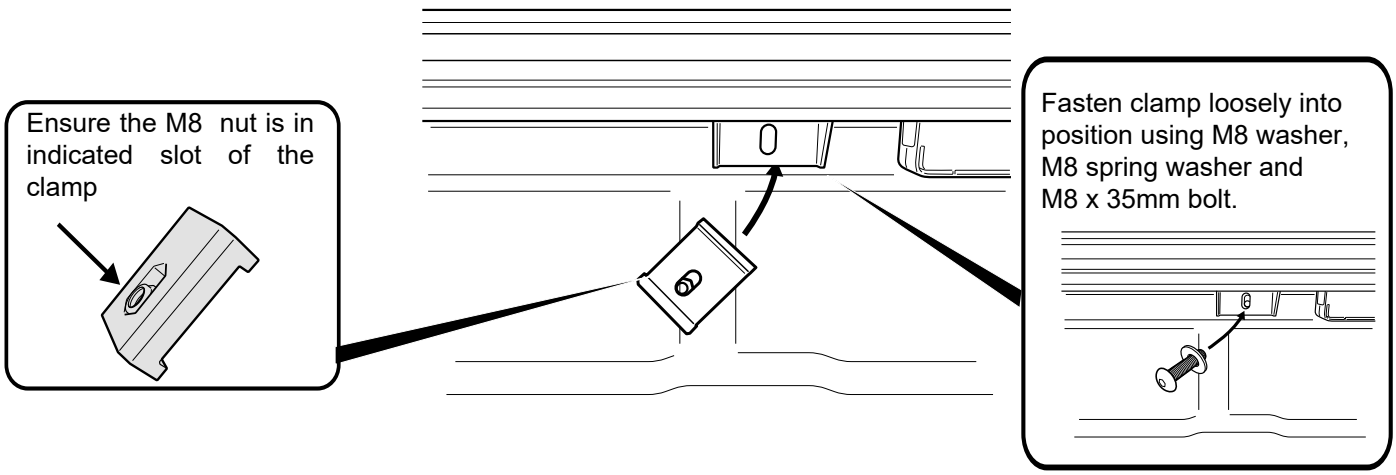

Apply pressure then tighten clamps in the order indicated.

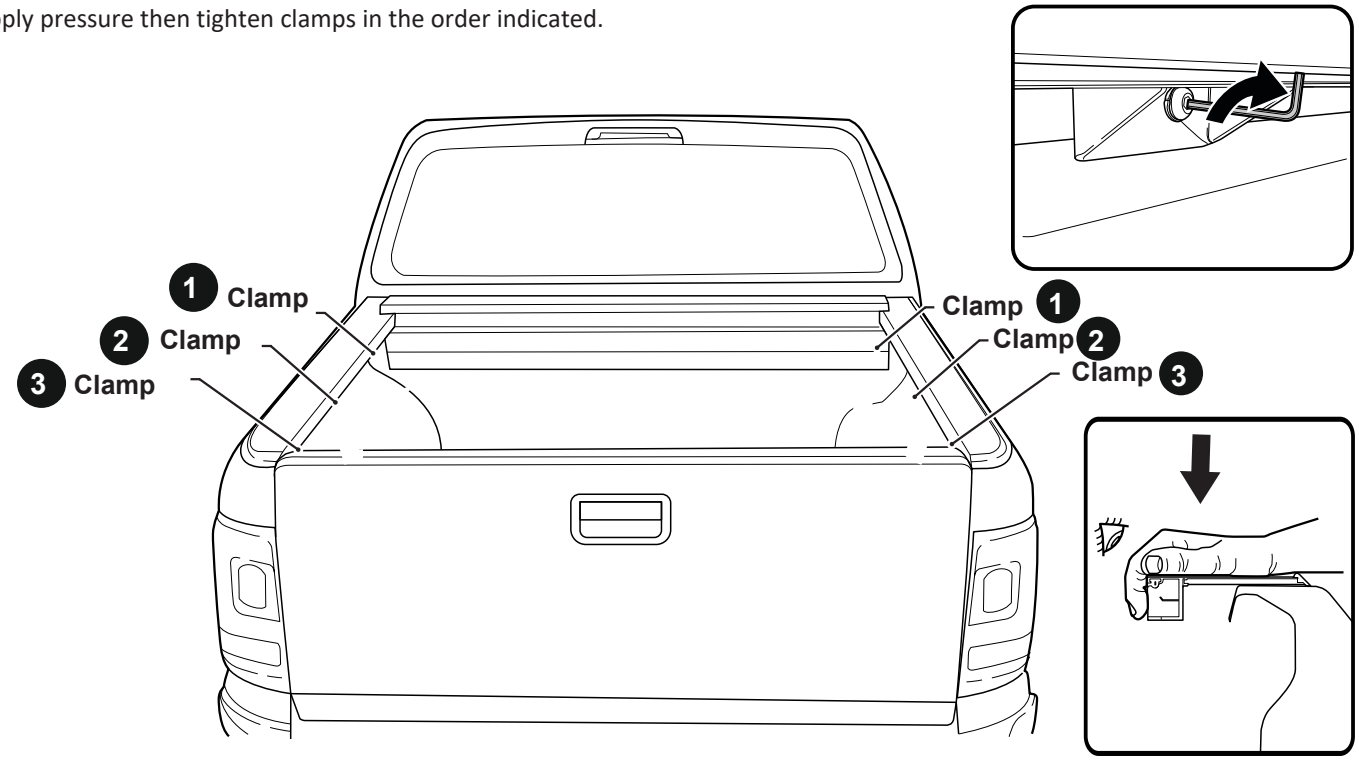

© Roll Я Cover

Apply flat plate behind adjusting bolt hole to the ute bed panel or to the liner if the Ute is equipped with a tub liner.

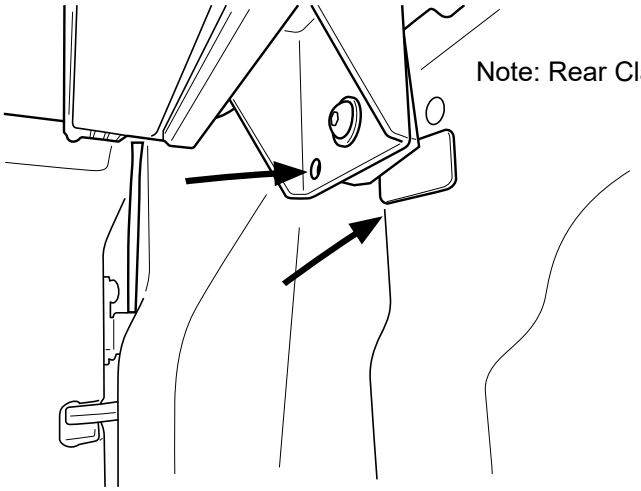

Note: Rear Clamp bracket.

Note: Clean surface before applying flat plate.

Feed M8 nut into M8x70mm bolt and through clamp bracket's pre-installed nutsurt as indicated.

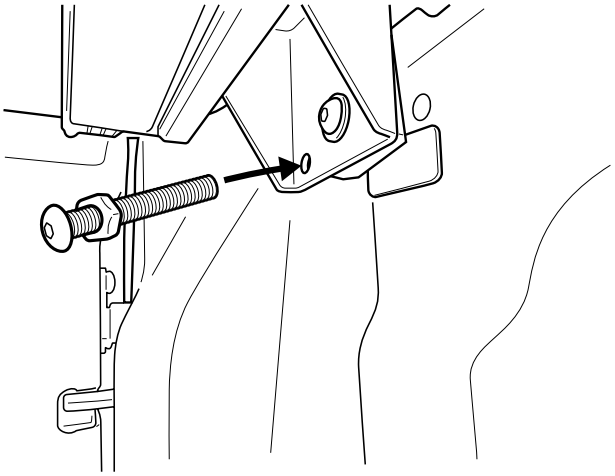

Side rail rubber must have a 1mm gap from the top of the tailgate in the closed position.

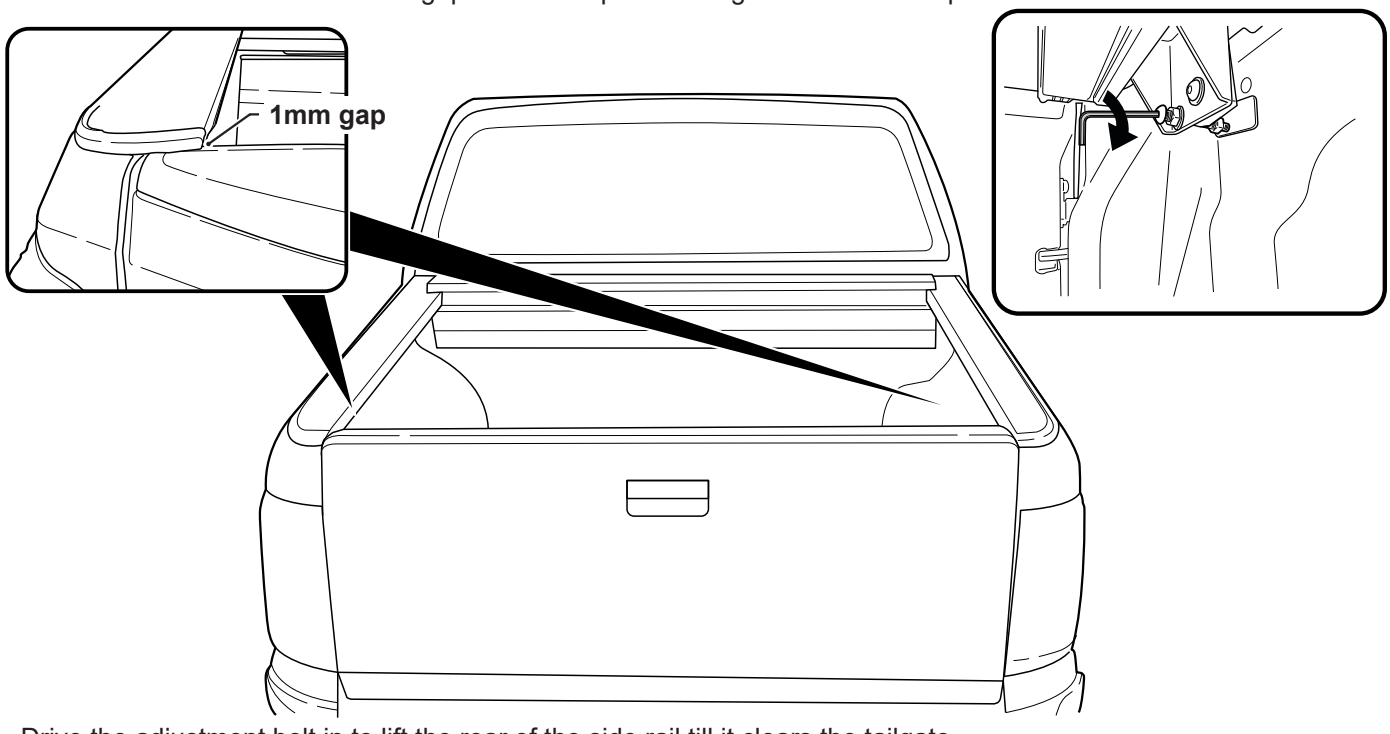

Drive the adjustment bolt in to lift the rear of the side rail till it clears the tailgate.

© Roll Я Cover

Fasten the M8 nut against clamp bracket.

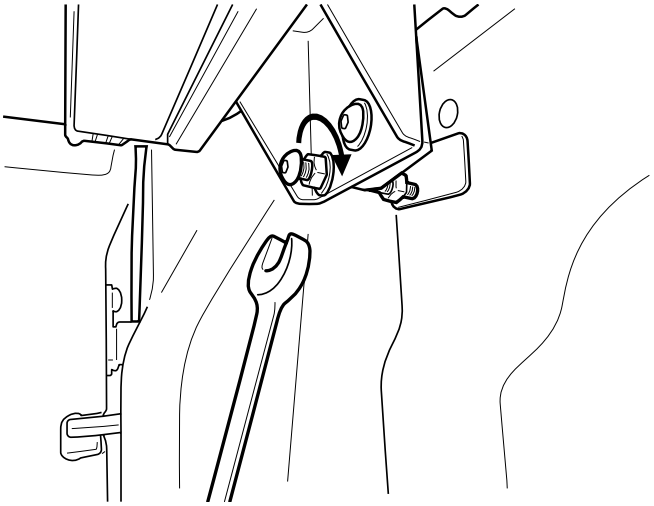

Install front drain pipes through pre-drilled holes of the canister. (RHS/LHS)

Note: With care push tube in. Taking care pull the tube back so it seals correctly against the front panel of the tub.

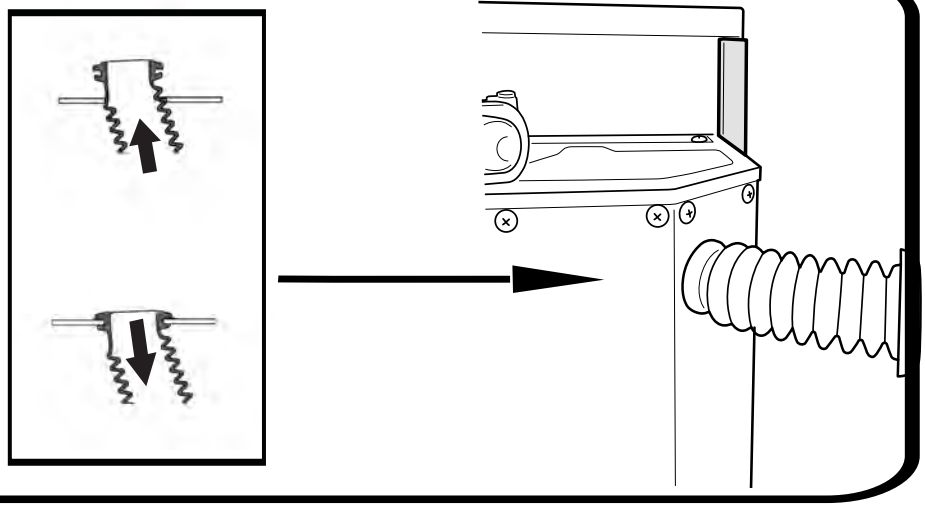

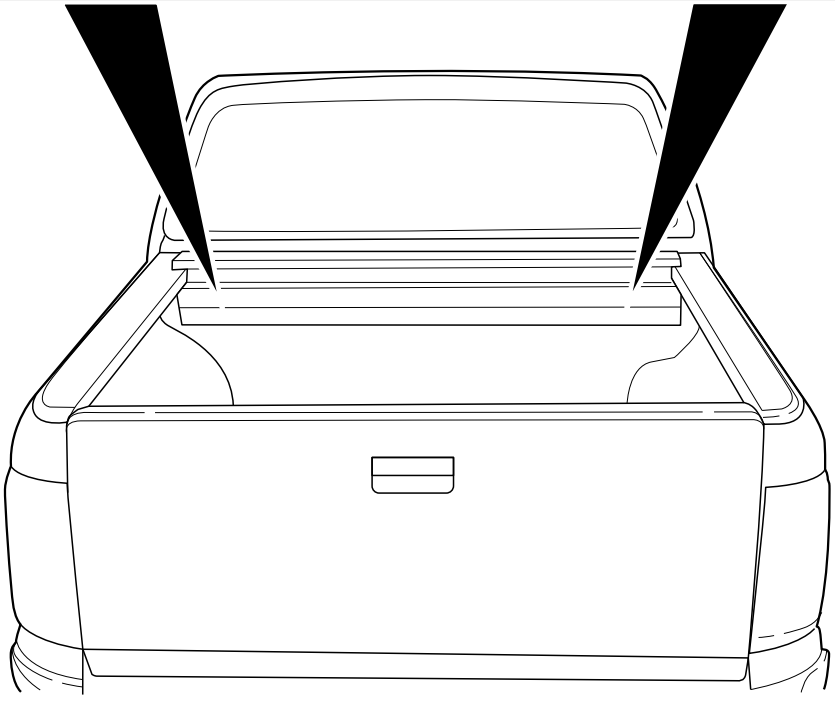

© Roll Я Cover

a. Connect Battery loom S2.75 to Receiver loom.
b. **Carefully** connect CI-Loom-short to Receiver loom.

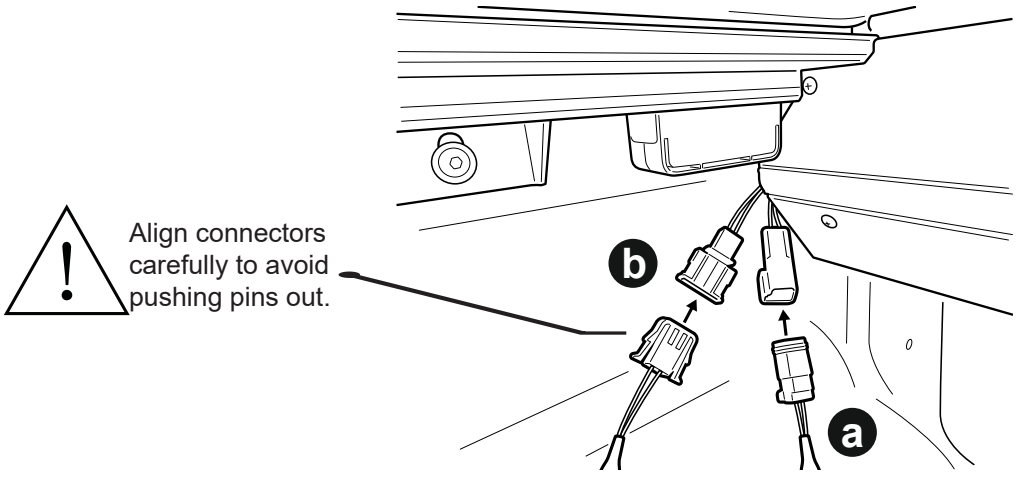

NOTE: 1. To wear in the Roll R Cover please fully open & close the cover approximately 15 times after install is complete.

2. Set your vehicle locking system to unlock all doors with one press of the factory remote unlock button. This setting can be found in your vehicle settings.

Operating instructions:
Press unlock on vehicle key fob to activate controller.
When vehicle is unlocked the side rail sensor buttons will be active to control.
When vehicle is locked the side rail sensor buttons will be inactive.

Using factory key fob to operate:
Pressing unlock twice on the factory key fob within 4 seconds, will activate the roll r cover to open.
Pressing lock twice on the factory key fob within 4 seconds, will activate the roll r cover to close.

Vehicle proximity:
Tapping the proximity twice to open or lock the car door will act exactly the same way as the key fob being pressed twice.

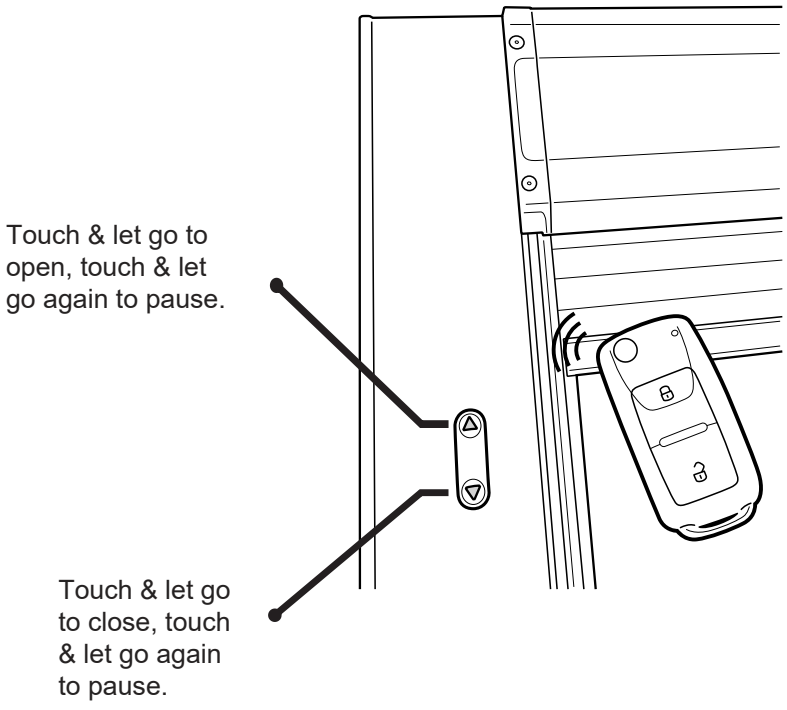

© Roll Я Cover